ALTO-SHAAM®

Combitherm®
CombiTouch® Gas

ecosmart®

TECHNICAL SERVICE MANUAL

20.20esG CombiTouch

7.14esG CombiTouch

24•7 Your Service Hotline 1-800-558-8744

W164 N9221 Water Street • P.O. Box 450 • Menomonee Falls, Wisconsin 53052-0450 USA
PHONE: 262.251.3800 • 800.558.8744 USA / CANADA FAX: 262.251.7067 • 800.329.8744 U.S.A. ONLY
www.alto-shaam.com

PRINTED IN U.S.A. MN-29248 • 05/11

How to Use this Technical Service Manual

This manual has been compiled as a complete resource for a technician working on Combitherm CombiTouch Gas models. It includes necessary product information and drawings, along with helpful troubleshooting procedures.

Navigation

On this document, starting with the Main Table of Contents on the following page, you may click on any item that has a page number and quickly jump to the information you need. Note that you may Return to the Main Table of Contents from the bottom of any Section Contents page.

Printing

From this document, you may print the Current Page or any range of pages.

Here's a tip: Because printers vary in their capacity to handle large drawings, make a test print of one of the Wiring Diagrams before printing the model's section.

TABLE OF CONTENTS

HOW TO USE THIS TECHNICAL SERVICE MANUAL	i
TABLE OF CONTENTS	ii
COMBITOUCH CONTROL INTRODUCTION	1
CONTROL PANEL IDENTIFICATION	2
FACTORY DEFAULT SETTINGS	6
SAFETY PRECAUTIONS	7
OPERATION MODES	
Steam	8
Combination	10
Convection	12
Retherm	14
Core Temperature Probe	16
Core Temperature - Delta-T	17
AUXILIARY FUNCTIONS	
Preheating	18
Gold-n-Brown™	18
Cool-Down Feature	18
Reduced Fan Speed	19
Reduced Power	19
Multi-shelf Timer	19
Steam Injection	19
CombiSmoker™ Procedures	20
PREPROGRAMMED RECIPES	
Using Preprogrammed Recipes	22
Recipe Programming	23
Preprogrammed Bakery Recipes	24
Preprogrammed Convenience Product Recipes	25
Preprogrammed Fish & Seafood Recipes	27
Preprogrammed Meat Recipes	28
Preprogrammed Miscellaneous Recipes	30
Preprogrammed Poultry Recipes	31
Preprogrammed Vegetable Recipes	32
HACCP ACCESS	34
CLEANING & MAINTENANCE	
Cleaning Menus	35
Preventive Maintenance	36
Food Trolley Cleaning	36
Protecting Stainless Steel Surfaces	37
Cleaning Agents	37
Cleaning Materials	37
Daily Gasket Cleaning	38
Probe Usage and Cleaning	38
Daily Oven Cleaning	38
Daily Steam Generator Flush	38
Regular Decalcification	38
Monthly Cleaning	38
Combitherm Oven Cleaner Precautions	39
Steam Generator Flush	39
Decalcification	39
TROUBLE SHOOTING	
Emergency Operation Mode	40
Error Codes	42
COMBITHERM PARTS	
Service Parts	47
COMBITHERM WIRING DIAGRAMS	
Index	78

COMBITOUCH® CONTROL

The Combitherm CombiTouch control features a simple, graphics-based control panel that commands all the oven functions. Access up to 250 of your recipes that are identified by your own uploaded pictures. Manual cooking by time and temperature also are easily done with the CombiTouch control.

Intuitive interface - The Alto-Shaam CombiTouch offers a simple interface that commands all of the Combitherm's cooking functions. As the name implies, it is fully operable by touch.

Graphic controls - The highly visual graphic-based control overcomes language barriers while the simple, logical procedures ensure that correct steps are followed every time.

An excellent memory - Access up to 250 of your recipes that are identified by your own uploaded pictures. The Combitherm with CombiTouch also comes standard with more than 100 pre-programmed recipes and photos, covering most commonly prepared food items.

STEAM MODE

COMBINATION MODE

CONVECTION MODE

RETHERM MODE

Standard HACCP - The Combitherm with CombiTouch includes a standard downloadable HACCP function.

Six levels of Gold-n-Brown™ - Six precise and consistent browning levels are available with the CombiTouch. The exclusive Gold-n-Brown feature gives the operator the ability to achieve the ideal cooking environment for the ideal finish.

Superior baking - The new two-speed reversing fan provides excellent and consistent baking results. A moisture injection feature provides perfect sheen and crust on breads and pastry items.

Multi-shelf timers - Track cooking time of either seven or 10 different food items (depending on oven size) in the same oven with multi-shelf timers. Time is tracked in minutes and seconds.

On-board diagnostics - The CombiTouch system includes on-board diagnostic functionality with results displayed right on the touch screen.

Reduced energy setting - CombiTouch features an interactive control display with reduced energy setting.

Powerful tool - The CombiTouch control plays an important part in our continuous improvement process. New features and abilities can be uploaded to your oven as they become available. Simply call our Service Department for assistance.

ECOSMART® TECHNOLOGY

The Alto-Shaam CombiTouch Combitherm combination oven/steamer employs Ecosmart operating efficiencies in the design and application of all operating and programming functions. Ecosmart operational characteristics include the use of a water barrier to close the oven compartment to the outside air. While maintaining a non-pressurized atmosphere, the primary purpose of the Ecosmart system is to prevent the steam and heat generated within the oven compartment from freely escaping to the outside.

The Ecosmart design displaces the air within the cooking compartment and achieves a higher level of steam saturation that offers quick-steaming at temperatures above 212°F (100°C).

This guide is provided as an operational aid with step-by-step instructions of the basic functions of the Combitherm oven, along with the many other additional features of the control.

OPERATING INSTRUCTIONS

CONTROL PANEL IDENTIFICATION

RECIPE MENU

When the oven is powered on, the Recipe Menu is the first screen you will see. This allows quick access to begin the cooking process. As a first time user, you may want to personalize your CombiOven to reflect the settings you are most comfortable with.

Return to Previous Screen - Press the red arrow to access the Main Menu screen.

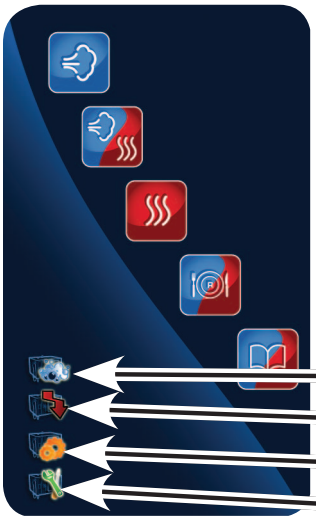

MAIN MENU SCREEN

1 CLEANING MODE
2 DOWNLOAD/UPLOAD FILES
3 SETTINGS
4 SERVICE MODE (PASSWORD PROTECTED)

1. **Cleaning Mode**
   Four (4) cleaning levels are available: rinse, light, normal, and heavy-duty cleaning.
2. **Download/Upload Files**
   Download all preprogrammed recipes (factory default and user-programmed) and photos to a USB memory stick. *See below for more information.*
3. **Settings and HACCP Access**
   Change factory default settings. *See next page for more information.*
4. **Service Mode (password protected)**
   This mode is only available to qualified service technicians.

UPLOAD/DOWNLOAD SCREEN

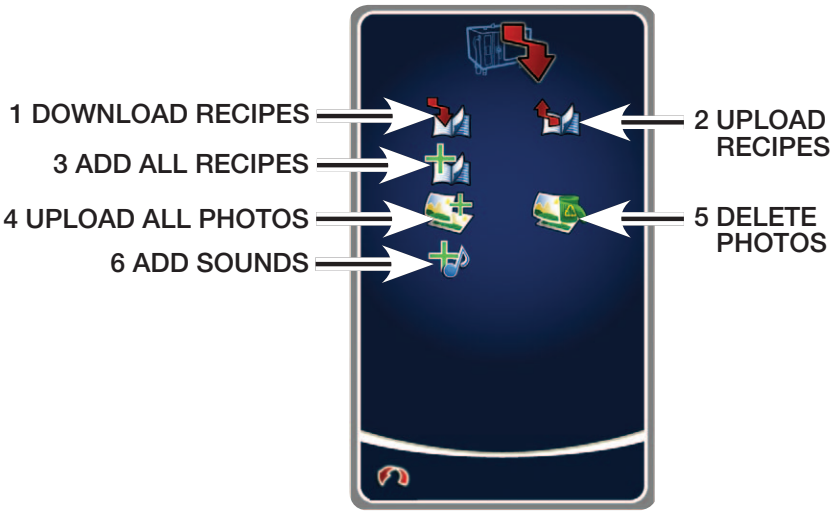

1. **Copy Recipes to Oven**
   Copy ***all*** recipes from USB memory stick to oven. This will replace and overwrite existing recipes.
2. **Copy Recipes from Oven**
   Copy ***all*** recipes from oven to USB memory stick
3. **Add Recipes to Oven**
   Copy ***all*** recipes from USB memory stick to the oven. This will add the recipes to the beginning of the existing recipe list.
4. **Copy Photos to Oven**
   Upload photo files from a USB memory stick to oven for user-programmed recipes
5. **Delete Photos on Oven**
   Delete specific photo files used in the programmed recipes on oven
6. **Add Sounds**

CONTROL PANEL IDENTIFICATION

SETTINGS SCREEN

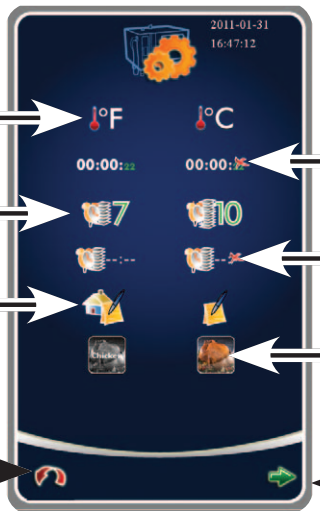

1. **Fahrenheit or Celsius Function -** Choose temperature format.
2. **Timer Format -** Display time as HOURS:MINUTES:SECONDS or HOURS:MINUTES.
3. **Multi-shelf Timer Number of Shelves -** Choose the default number shelves in the oven to be used by the multi-shelf timer.
4. **Multi-shelf Timer Format -** Display MINUTES:SECONDS or MINUTES only in timer.
5. **Default Memo -** Reverts all settings to factory defaults. Clears all user-input times and temperatures except those in programmed recipes.
6. **Display Settings -** Choose to display text or image assigned to a recipe.
7. **Return to Previous Screen -** Return to previous screen when finished adjusting settings.
8. **Forward to Next Screen -** Advance to next screen to review additional settings.
9. **Sound/Alarm Settings -** Change alarm sounds and volume.
10. **Touchscreen Brightness -** Adjust brightness of Touchscreen.
11. **Lock/Unlock Recipes -** Password protect preprogrammed recipes.
12. **Set/Change Date & Time -** Set or change oven time and date settings.
13. **HACCP Data -** Review data collected or download data to a USB drive.

OPERATING INSTRUCTIONS

CONTROL PANEL IDENTIFICATION

1 POWER ON KEY

1 POWER OFF KEY

2 STEAM MODE

4 CONVECTION MODE

5 RETHERM MODE

3 COMBINATION MODE

6 TEMPERATURE

7 TIME

8 CORE TEMPERATURE

11 START/STOP ICON

10 COOL DOWN

13 GOLD-N-BROWN MODE

14 SMOKING MODE (OPTIONAL)

9 PREHEAT

12 REDUCED POWER MODE

22 DELTA-T (ONLY VISIBLE IN CERTAIN MODES)

15 FAN SPEED

20 MULTI-SHELF TIMER

16 GO TO PREVIOUS SCREEN

19 FIND RECIPE

17 CLEANING MODE

18 ADD RECIPE

CONTROL PANEL IDENTIFICATION

MAIN MENU ICONS

1. **Power ON key**
Activates power to the oven and automatically fills the steam generator equipped models with water that will heat to a stand-by mode temperature of 188°F (77°C).

2. **Steam Mode**
The oven will operate in the steam mode at a temperature range of 85°F to 250°F (30°C to 121°C).
   - Automatic steaming at 212°F (100°C) factory-set default.
   - Quick steaming between 213°F and 250°F (101°C and 121°C).
   - Low temperature steaming between 85°F and 211°F (29°C and 99°C).

3. **Combination Mode**
Selection key for cooking with a combination of steam and convection heat. Can be set between 212°F to 485°F (100°C and 252°C).

4. **Convection Mode**
Selection key for convection cooking without steam at a temperature range of 85°F to 485°F (29°C to 252°C).

5. **Retherm Mode**
Food rethermalization or reheating mode will operate with automatic steam injection at a temperature range of 245°F to 320°F (120°C to 160°C).

6. **Temperature**
Used to set the required cooking temperature, to recall the set cooking temperature, or to check the actual oven temperature.

7. **Time**
Used to set the required cooking time or recall the set cooking time.

8. **Core Temperature**
Used to set the required internal product temperature, to recall the internal product temperature set by the operator, or to display the current internal temperature of the product.

9. **Preheat Mode**
Preheats the oven cavity to a temperature set by user.

10. **Cool Down Mode**
Lowers temperature of the oven cavity at an accelerated pace to temperature set by user.

11. **Start/Stop**
Initiates all cooking mode functions and programmed procedures stored in memory. Stops an activated cooking mode or programmed procedure currently in progress.

AUXILIARY FUNCTION ICONS

12. **Reduced Power Mode**
Used to reduce kitchen power peaks and energy consumption.

13. **Gold-N-Brown Mode**
This indicator will illuminate when the browning function is set by the operator in a timed or programmed cooking cycle in any mode. Level 1 provides least amount of browning, level 6 the most.

14. **Smoking Mode (optional)**
This indicator will illuminate when the smoking function is set by the operator in a timer, probe or programmed cooking cycle in either convection mode or combination mode.

15. **Fan Speed**
This indicator will illuminate whenever the operator sets a reduced fan speed to protect products affected by high-velocity air movement.

16. **Return to Previous Menu**

17. **Cleaning Mode**
Four (4) cleaning levels are available: rinse, light, normal, and heavy-duty cleaning.

18. **Add Recipe**
Used to create, change, duplicate, and delete programmed menus.

19. **Find Recipe**
Access a menu list of all stored cooking programs.

20. **Multi-shelf Timer**
Use separate timers for one or more shelves in the oven compartment.

21. **Steam Injection (not shown on illustration)**
Press to add moisture in any cooking mode. Steam will inject into the cavity as long as the icon is touched.

22. **Delta-T Core Temperature (only visible in certain modes)** Cook by probe. Mode automatically adjusts cooking temperature in proportion to the internal temperature of the product.

OPERATING INSTRUCTIONS

COMBITOUCH FACTORY DEFAULT SETTINGS

COOKING MODE	OVEN TEMPERATURE	CORE TEMPERATURE	COOKING TIME
Steam	212°F (100°C)	160°F (70°C)	25 minutes
Combination Steam	350°F (175C)	160°F (70°C)	60 minutes
Convection	350°F (175°C)	160°F (70°C)	30 minutes
Retherm	275°F (135°C)	160°F (70°C)	5 minutes
Preheat	350°F (175°C)	N/A	N/A
Cool Down	212°F (100°C)	N/A	N/A
Delta T	120°F (50°C)	170°F (75°C)	N/A

IMPORTANT SAFETY PRECAUTIONS

NOTE: **Automatic steam venting is a standard safety feature built into all Combitherm oven models. This feature vents all steam from the oven compartment immediately before cooking time expires or set probe temperature is reached.**

This function is provided in all programmed and timed production when operating in any Steam, Combination, Convection, and Retherm cooking mode. Automatic steam venting does not function if the oven door is opened before time expires or when the oven has been set to continuous operation.

NOTE: **Use authorized combitherm oven cleaner only. unauthorized cleaning agents may discolor or harm interior surfaces of the oven. Read and understand label and material safety data sheet before using the oven cleaner.**

FOR OPERATOR SAFETY

NOTE AND OBSERVE ALL SAFETY PRECAUTIONS LOCATED THROUGHOUT THIS GUIDE

DANGER

AT NO TIME SHOULD THE INTERIOR OR EXTERIOR BE STEAM CLEANED, HOSED DOWN, OR FLOODED WITH WATER OR LIQUID SOLUTION OF ANY KIND. DO NOT USE WATER JET TO CLEAN.

SEVERE DAMAGE OR ELECTRICAL HAZARD COULD RESULT.

WARRANTY BECOMES VOID IF APPLIANCE IS FLOODED

CAUTION

METAL PARTS OF THIS EQUIPMENT BECOME EXTREMELY HOT WHEN IN OPERATION. TO AVOID BURNS, ALWAYS USE HAND PROTECTION WHEN OPERATING THIS APPLIANCE.

WARNING

DO NOT **HANDLE PANS CONTAINING LIQUID OR SEMILIQUID PRODUCTS POSITIONED ABOVE THE EYE LEVEL OF THE OPERATOR. SUCH PRODUCTS CAN SCALD AND CAUSE SERIOUS INJURY.**

WARNING

HOT STEAM CAUSES BURNS

ROTATE THE DOOR HANDLE TO THE FIRST OPEN ROTATION POSITION ONLY. WAIT UNTIL THE STEAM IS VENTED BEFORE FULLY OPENING THE DOOR.

CAUTION

DO NOT **USE THE ATTACHED HAND-HELD HOSE TO SPRAY ANYTHING OTHER THAN THE INTERIOR OF THE COMBITHERM OVEN COMPARTMENT.**

DO NOT **USE THE SPRAY HOSE ON THE SURFACE OF A HOT COOKING COMPARTMENT. ALLOW THE OVEN TO COOL TO A MINIMUM OF 150°F (66°C).**

STEAM MODE

The Steam mode provides the operator with the ability to steam, poach, or blanch. This mode will automatically steam at the boiling point of water; quick-steam above the boiling point for faster cooking results; or low temperature steam, below the boiling point, for more delicate products such as pâté, mousse, seafood, or custard.

PRESS ON BUTTON TO POWER OVEN ON.

PRESS THE STEAM MODE ICON.

Automatic Steam temperature of 212°F (100°C) will appear in the display. The last set time or oven control default setting for time will appear in the display.

PRESS THE START ICON TO STEAM AT THE DISPLAYED SETTINGS.

TO CHANGE THE DISPLAYED SETTINGS:

TOUCH THE DISPLAYED TEMPERATURE.

The cooking temperature will appear at the top of the temperature selection window. Type in desired temperature or use up and down arrows to adjust temperature. When finished, touch the green checkmark key to confirm change.

- Automatic Steaming 212°F (100°C)
- Quick Steaming 213°F to 250°F (101°C to 121°C)
- Low Temperature Steaming 85°F to 211°F (29°C to 99°C)

TO COOK BY TIME:

TOUCH THE DISPLAYED TIME.

The cooking time will appear at the top the time selection window. Type in desired time period or use up and down arrows to adjust time. When finished, touch the green checkmark key to confirm change.

Or, to set Continuous Operation mode, type in --:-- and touch the green checkmark key to confirm.

TO COOK BY PRODUCT CORE TEMPERATURE:

TOUCH THE PROBE ICON.

The previously set core temperature or oven control default setting will appear highlighted within the oven display. Touch the displayed core temperature. The internal product core temperature will appear at the top of the temperature selection window. Type in desired internal product core temperature or use up and down arrows to adjust temperature. When finished, touch the green checkmark key to confirm change.

Attach removable probe before activating core temperature function, and insert into product.

PRESS THE GREEN START ARROW ICON TO BEGIN COOKING IN STEAM MODE.

- The temperature and remaining cooking time will appear in the display.
- If cooking by probe, the actual internal product temperature will appear next to the icon during operation. To change the set value for core temperature, press the temperature next to the icon and make changes as required.

When the cooking time has expired or the operator set internal temperature has been reached, an alarm will sound indicating the end of the operating mode.

- To stop the buzzer, press the red stop key or open the oven door.

TO STOP COOKING PROGRAM AT ANY TIME, PRESS RED STOP BUTTON.

STEAM MODE CHEF OPERATING TIPS

This mode will steam a full or partial load of a single product, or multiple products without transfer of flavors. When steaming multiple products, however, individual product cooking times must be taken into consideration.

The non-pressurized atmosphere of the Combitherm also provides the ability to open the door during the steam mode in order to monitor products more closely throughout the steaming process.

STEAM

Perforated, 2-1/2" deep pans (65mm) are particularly suitable for use in this program mode. These pans will provide a shorter cooking time and will prevent product over-cooking at the bottom of the pan.

Separate ice-encrusted vegetables before steaming to assure even cooking.

A variety of products can be steamed at the same time but attention must be paid to the different cooking times required for each food product.

HIGH TEMP STEAMING

High temperature steaming is suitable for hearty, root-type vegetables such as potatoes, legumes, and cabbage.

High temperature steaming provides a cooking time which is approximately 10-percent shorter than the regular steam mode temperature of 212°F (100°C).

Set the steam cooking temperature between 221°F (105°C) and 230°F (110°C) for small loads and between 230°F (110°C) and 250°F (121°C) for full loads.

LOW TEMP STEAM

The low temperature steam mode will function whenever the oven compartment temperature is below 212°F (100°C).

It will take longer to steam products using the low temperature steam mode.

Steaming sausages in low temperature steam prevents cracked or peeling skins.

Use low temperature steam for delicate foods such as shrimp, fish, seafood, and crème caramel.

For best results, low temperature steam all delicate food items at a temperature of 210°F (99°C) or below.

COMBINATION MODE

The Combination mode will prove to be the most versatile and widely used mode the Combitherm oven has to offer. It will produce the best possible results on the widest variety of products — all within the shortest period of time. The unique control function of this mode enables the operator to roast or bake with a combination of steam and convection heat. In addition to shorter cooking times, this combination of steam and heat offers less product shrinkage and more moisture retention than obtained in a standard convection oven.

PRESS ON BUTTON TO POWER OVEN ON.

PRESS THE COMBINATION MODE ICON.

The last set values or oven control default setting for temperature and time will appear in the display.

PRESS THE START ICON TO COOK AT THE DISPLAYED SETTINGS.

TO CHANGE THE DISPLAYED SETTINGS:

TOUCH THE DISPLAYED TEMPERATURE.

The cooking temperature will appear at the top of the temperature selection window. Type in desired temperature or use up and down arrows to adjust temperature. When finished, touch the green checkmark key to confirm change.

- Cooking temperature range: 212 to 485 °F (100 to 252°C)

TO COOK BY TIME:

TOUCH THE DISPLAYED TIME.

The cooking time will appear at the top the time selection window. Type in desired time period or use up and down arrows to adjust time. When finished, touch the green checkmark key to confirm change.

Or, to set Continuous Operation mode, type in --:-- and touch the green checkmark key to confirm.

TO COOK BY PRODUCT CORE TEMPERATURE:

TOUCH THE PROBE ICON.

The previously set core temperature or oven control default setting will appear highlighted within the oven display. Touch the displayed core temperature. The internal product core temperature will appear at the top of the temperature selection window. Type in desired internal product core temperature or use up and down arrows to adjust temperature. When finished, touch the green checkmark key to confirm change.

Attach removable probe before activating core temperature function, and insert into product.

PRESS THE GREEN START ARROW ICON TO BEGIN COOKING IN COMBINATION MODE.

- The temperature and remaining cooking time will appear in the display.
- If cooking by probe, the actual internal product temperature will appear next to the icon during operation. To change the set value for core temperature, press the temperature next to the icon and make changes as required.

PRESS FOR STEAM INJECTION AT ANY TIME DURING COOKING. Steam will inject into the cavity as long as the icon is touched.

When the cooking time has expired or the operator set internal temperature has been reached, an alarm will sound indicating the end of the operating mode.

- To stop the buzzer, press the red stop key or open the oven door.

TO STOP COOKING PROGRAM AT ANY TIME, PRESS RED STOP BUTTON.

COMBINATION MODE CHEF OPERATING TIPS

The Combination mode injects the optimum amount of steam automatically. There is no need to select moisture levels. Foods do not dry out. Flavors are retained with no transfer of flavors when mixing product loads.

Due to automatic steam adjustment, the door can be opened at any time during a cooking operation. Be certain to observe the safety warning when opening the oven door.

The Combination mode is particularly efficient when used for baking, broiling, grilling, stewing, braising, and roasting.

When using the Combination mode, cooking temperatures can be reduced 10- to 20-percent below the temperatures used for conventional cooking methods.

Cooking time will be reduced approximately 40-percent when cooking at the same temperature used for convection oven cooking and up to 50- to 60-percent less time when cooking at the same temperature used for a conventional oven.

Food browning in the Combitherm begins at a cooking temperature of approximately 250°F (120°C).

A higher cooking temperature results in heavier browning but also results in greater product weight loss. To achieve additional browning use the Moisture Vent Key or set Gold-n-Brown into the product procedure. Gold-n-Brown is particularly useful for adding color to high moisture products such as chicken and other poultry items or for additional browning of full loads and other moist products.

The Combination mode provides even browning without the necessity to turn the pans.

For more even cooking, do not cook in pans deeper than 4" (100mm).

CONVECTION MODE

The Convection mode operates with hot circulated air within a temperature range of 85° to 485°F (29 to 252°C). For many applications, better results may be achieved with the Combination mode; therefore, the operator may want to consider using the Convection mode on a more limited basis.

PRESS ON BUTTON TO POWER OVEN ON.

PRESS THE CONVECTION MODE ICON.

The last set values or oven control default setting for temperature and time will appear in the display.

PRESS THE START ICON TO COOK AT THE DISPLAYED SETTINGS.

TO CHANGE THE DISPLAYED SETTINGS:

TOUCH THE DISPLAYED TEMPERATURE.

The cooking temperature will appear at the top of the temperature selection window. Type in desired temperature or use up and down arrows to adjust temperature. When finished, touch the green checkmark key to confirm change.

- Cooking temperature range: 85 to 485 °F (29 to 252°C)

TO COOK BY TIME:

TOUCH THE DISPLAYED TIME.

The cooking time will appear at the top the time selection window. Type in desired time period or use up and down arrows to adjust time. When finished, touch the green checkmark key to confirm change.

Or, to set Continuous Operation mode, type in --:-- and touch the green checkmark key to confirm.

TO COOK BY PRODUCT CORE TEMPERATURE:

TOUCH THE PROBE ICON.

The previously set core temperature or oven control default setting will appear highlighted within the oven display. Touch the displayed core temperature. The internal product core temperature will appear at the top of the temperature selection window. Type in desired internal product core temperature or use up and down arrows to adjust temperature. When finished, touch the green checkmark key to confirm change.

Attach removable probe before activating core temperature function, and insert into product.

PRESS THE GREEN START ARROW ICON TO BEGIN COOKING IN COMBINATION MODE.

- The temperature and remaining cooking time will appear in the display.
- If cooking by probe, the actual internal product temperature will appear next to the icon during operation. To change the set value for core temperature, press the temperature next to the icon and make changes as required.

PRESS FOR STEAM INJECTION AT ANY TIME DURING COOKING. Steam will inject into the cavity as long as the icon is touched.

When the cooking time has expired or the operator set internal temperature has been reached, an alarm will sound indicating the end of the operating mode.

- To stop the buzzer, press the red stop key or open the oven door.

TO STOP COOKING PROGRAM AT ANY TIME, PRESS RED STOP BUTTON.

CONVECTION MODE CHEF OPERATING TIPS

The Convection Mode can be used to roast or bake products needing very short cooking times or for high moisture products such as muffins, cakes, and cookies, or for browning the surface of the product.

The Convection mode works best with foods containing little moisture or for very moist food which require a dryer finished product.

For baking, preheat the Combitherm at a temperature of 325°F to 375°F (163°C to 191°C). Once preheated, reset the temperature as required.

A higher cooking temperature results in heavier browning but also results in greater product weight loss. To achieve additional browning use the Moisture Vent Key or set the Browning Feature into the product procedure.

RETHERM MODE

The Retherm mode operates with hot circulated air within a temperature range of 245° to 320°F (120° to 160°C).

PRESS ON BUTTON TO POWER OVEN ON.

PRESS THE RETHERM MODE ICON.

The last set values or oven control default setting for temperature and time will appear in the display.

PRESS THE START ICON TO COOK AT THE DISPLAYED SETTINGS.

TO CHANGE THE DISPLAYED SETTINGS:

TOUCH THE DISPLAYED TEMPERATURE.

The cooking temperature will appear at the top of the temperature selection window. Type in desired temperature or use up and down arrows to adjust temperature. When finished, touch the green checkmark key to confirm change.

- Cooking temperature range: 245 to 320 °F (120 to 160°C)

TO COOK BY TIME:

TOUCH THE DISPLAYED TIME.

The cooking time will appear at the top the time selection window. Type in desired time period or use up and down arrows to adjust time. When finished, touch the green checkmark key to confirm change.

Or, to set Continuous Operation mode, type in --:-- and touch the green checkmark key to confirm.

TO COOK BY PRODUCT CORE TEMPERATURE:

TOUCH THE PROBE ICON.

The previously set core temperature or oven control default setting will appear highlighted within the oven display. Touch the displayed core temperature. The internal product core temperature will appear at the top of the temperature selection window. Type in desired internal product core temperature or use up and down arrows to adjust temperature. When finished, touch the green checkmark key to confirm change.

Attach removable probe before activating core temperature function, and insert into product.

PRESS THE GREEN START ARROW ICON TO BEGIN COOKING IN COMBINATION MODE.

- The temperature and remaining cooking time will appear in the display.
- If cooking by probe, the actual internal product temperature will appear next to the icon during operation. To change the set value for core temperature, press the temperature next to the icon and make changes as required.

PRESS FOR STEAM INJECTION AT ANY TIME DURING COOKING. Steam will inject into the cavity as long as the icon is touched.

When the cooking time has expired or the operator set internal temperature has been reached, an alarm will sound indicating the end of the operating mode.

- To stop the buzzer, press the red stop key or open the oven door.

TO STOP COOKING PROGRAM AT ANY TIME, PRESS RED STOP BUTTON.

RETHERM MODE CHEF OPERATING TIPS

Since plated meals consist of dissimilar products, there are several important factors to consider in order to produce the finest results. Product density (compactness), thickness, quantity of product on each plate, and quantity of plates all relate to the length of time necessary to reheat. Again, experience is the best method to determine reheating time. Once the time has been determined and recorded for a specific meal, the results will be consistent for future reheating times.

HELPFUL HINTS FOR REHEATING ON THE PLATE

- ALL FOOD COMPONENTS ON THE PLATE SHOULD BE OF SIMILAR DENSITIES.
- ALL FOOD COMPONENTS ON THE PLATE SHOULD BE SIMILAR IN THICKNESS.
- ARRANGE ALL FOOD COMPONENTS EVENLY ON THE PLATE.
- AVOID EXCESSIVE OVERLAPPING OF PRODUCT.
- SAUCES MUST BE HEATED AND ADDED TO PRODUCT AFTER REHEATING.
- A MIXED VARIETY OF MEALS CAN BE REHEATED AT THE SAME TIME.

À LA CARTE RETHERMALIZATION

À la carte rethermalization is designed to take a single plate from a refrigerated temperature to serving temperature for immediate service. Plates are prepared in advance, covered, and refrigerated. Preheat the Combitherm oven. Remove plate from refrigeration and place in the oven at 275°F (135°C) for an uncovered plate or 300°F (150°C) for a covered plate. Plates with meat components will take more time than plates containing all vegetable components. Follow internal temperature requirements for reheating and allow for override time. After reheating, remove the plate from the oven, add any sauces, garnish, and serve. This process can be repeated as required.

For the most efficient continuous service, it is suggested that the Combitherm oven be dedicated to the rethermalization process during serving hours.

BANQUET RETHERMALIZATION

Banquet rethermalization is designed for high volume, full or partial load (multiple plate) reheating.

Plates are assembled in advance, covered, and refrigerated or loaded on the roll-in cart and refrigerated. Preheat the Combitherm oven at 275°F (135°C) for uncovered plates or 300°F (150°C) for covered plates. Remove plates or the roll-in cart from refrigeration, load in the oven and set timer as required. Follow internal temperature requirements for reheating and allow for override time. Remove the plates or roll-in cart from the Combitherm.

Placing our thermal blanket cover over the roll-in cart keeps food hot for 20 to 40 minutes, depending on the type of food, retherm temperature, and environmental factors. For longer holding times, roll the cart into the CombiMate™ companion holding cabinet.

RETHERMALIZING PREFABRICATED AND VACUUM-PACKED FROZEN FOODS

For bulk product rethermalization, completely defrost product bags in walk-in cooler. DO NOT REMOVE PRODUCT FROM THE BAG. Load thawed bags in preheated oven and rethermalize in the Low Temperature Steam mode until the required internal temperature is reached. Place rethermalized bags in a preheated holding cabinet set at 140° to 165°F (60° to 74°C) until ready for service.

For large volume on-the-plate regeneration, defrost bags in walk-in cooler. Open bags and plate per menu requirements in a (maximum) 55°F (13°C) refrigerated room. Place on Alto-Shaam roll-in cart (trolley), and roll into Combitherm oven preheated at 275°F (135°C).

Regenerate in the Convection mode for 3 to 5 minutes. Switch to the Retherm mode for an additional 3 minutes or more if required. Placing our thermal blanket cover over the roll-in cart keeps food hot for 20 to 40 minutes, depending on the type of food, retherm temperature, and environmental factors. For longer holding times, roll the cart into the CombiMate™ companion holding cabinet.

PLATE COVERS MUST BE USED FOR ON-THE-PLATE REGENERATION.

CORE TEMPERATURE PROBE MODE

As an alternative to timer operation, the Core Temperature Probe mode can be used in conjunction with any program mode to cook by sensing internal product temperature using the included probe. For a more accurate internal temperature, an optional, specialized, Combitherm product probe senses temperature from four strategic points and displays a temperature average.

PRESS ON BUTTON TO POWER OVEN ON.

ATTACH REMOVABLE PROBE BEFORE ACTIVATING CORE TEMPERATURE FUNCTION, AND INSERT INTO PRODUCT.

The probe must be inserted so that the tip is positioned in the center of the food mass. For liquid or semi-liquid foods, suspend the probe in the center of the product and secure the probe wire to the edge of the container.

PRESS THE REQUIRED COOKING MODE ICON. The last set values or oven control default setting for temperature and time will appear in the display.

PRESS THE START ICON TO COOK AT THE DISPLAYED SETTINGS, OR

TOUCH THE DISPLAYED TEMPERATURE.

The cooking temperature will appear at the top of the temperature selection window. Type in desired temperature or use up and down arrows to adjust temperature. When finished, touch the green checkmark key to confirm change.

TOUCH THE PROBE ICON.

The previously set core temperature or default setting will appear highlighted within the oven display. Touch the displayed core temperature. The internal product core temperature will appear at the top of the temperature selection window. Type in desired internal product core temperature or use up and down arrows to adjust temperature. When finished, touch the green checkmark key to confirm change.

PRESS THE GREEN START ARROW ICON TO BEGIN COOKING.

- The actual internal product temperature will appear next to the icon during operation. To change the set value for core temperature, press the temperature next to the icon and make changes as required.

PRESS FOR STEAM INJECTION AT ANY TIME DURING COOKING. Steam will inject into the cavity as long as the icon is touched.

When the operator-set internal temperature has been reached, an alarm will sound indicating the end of the operating mode.

- To stop the buzzer, press the red stop key or open the oven door.

TO STOP COOKING PROGRAM AT ANY TIME, PRESS RED STOP BUTTON.

DELTA-T CORE TEMPERATURE COOKING MODE

This special program function cooks by internal product temperature with the use of the probe. Unlike the standard core temperature mode however, the Delta-T oven temperature automatically increases in direct proportion to the internal temperature of the product. The Delta-T mode cooks with convection heat but provides a more gentle method of cooking. Browning occurs toward the end of the cooking cycle.

PRESS THE ON BUTTON TO POWER OVEN ON.

ATTACH REMOVABLE PROBE BEFORE ACTIVATING CORE TEMPERATURE FUNCTION, AND INSERT INTO PRODUCT.

The probe must be inserted so that the tip is positioned in the center of the food mass. For liquid or semi-liquid foods, suspend the probe in the center of the product and secure the probe wire to the edge of the container.

PRESS THE REQUIRED COOKING MODE ICON.
The last set values or oven control default setting for temperature and time will appear in the display.

TOUCH THE PROBE ICON.

The previously set core temperature or default setting will appear highlighted within the oven display. Touch the displayed core temperature. The internal product core temperature will appear at the top of the temperature selection window. Type in desired internal product core temperature or use up and down arrows to adjust temperature. When finished, touch the green checkmark key to confirm change.

PRESS THE DELTA T ICON THAT APPEARS IN THE LOWER LEFT CORNER OF THE TOUCH SCREEN.

PRESS THE GREEN START ARROW ICON TO BEGIN COOKING.

- The actual internal product temperature will appear next to the icon during operation. To change the set value for core temperature, press the temperature next to the icon and make changes as required.

PRESS FOR STEAM INJECTION AT ANY TIME DURING COOKING. Each push of the icon will release one pulse of steam.

When the operator-set internal temperature has been reached, a buzzer will sound indicating the end of the operating mode.

- To stop the buzzer, press the red stop key or open the oven door.

TO STOP COOKING PROGRAM AT ANY TIME, PRESS RED STOP BUTTON.

AUXILIARY FUNCTIONS

All auxiliary functions can be engaged at any time during any cooking mode and can be programmed into cooking procedures. At the end of a cooking mode or program, the oven automatically disengages all auxiliary functions.

PREHEATING FEATURE

SELECT DESIRED COOKING MODE.

PRESS PREHEAT ICON.

The preheat temperature will appear at the top of the preheat temperature selection window. Type in desired temperature or use up and down arrows to adjust temperature. When finished, touch the green checkmark key to confirm change.

When the preheat temperature has been reached, a buzzer will sound indicating the end of the preheat function. To stop the buzzer, press the red stop icon. The preheat temperature will be maintained if the stop icon is not pressed.

GOLD-N-BROWN FEATURE

The browning feature is an automatic function designed to regulate humidity to provide additional color to products as needed. This feature is particularly useful for adding color to high moisture products such as chicken and other poultry items, or for additional browning of full loads and other moist products. In addition, this feature may be used to add texture to fried items such as french fries or breaded chicken. Gold-n-Brown can be used in any cooking mode and can be programmed into a cooking procedure.

Browning can be used for any product. Depending on the type of product and product load, the browning feature may also slightly increase the set cooking time in order to fully complete the browning function. This is a standard operating condition of this feature.

SELECT DESIRED COOKING MODE.

ADJUST TEMPERATURE AND TIME SETTINGS.

PRESS THE GOLD-N-BROWN ICON.

Choose the desired Gold-n-Brown level. (Level 1 provides least amount of browning, level 6 the most.) After a level has been selected, the previous screen will be displayed and the Gold-n-Brown icon will be highlighted.

PRESS THE GREEN START ARROW ICON TO BEGIN COOKING.

The oven will engage the browning feature in the cooking mode set by the operator. Gold-N-Brown can be used in steam mode to reduce moisture.

COOL DOWN FEATURE

The cool-down feature provides the operator with the ability to lower the temperature of the oven compartment at an accelerated pace. This function is useful when it is necessary to immediately change from a high temperature cooking function to a lower temperature function or to the steam program. This function is also useful to help cool the oven compartment in preparation for cleaning.

CHEF OPERATING TIP

When using the cool-down feature in preparation for cleaning, it is important to remember that the temperature in the display indicates the air temperature inside the oven compartment and not the interior walls of the oven. Always allow the oven walls to cool to a minimum of 140°F (60°C) before spraying the compartment with oven cleaner.

PRESS COOL DOWN ICON.

The cool down temperature will appear at the top of the cool down temperature selection window. Type in desired temperature between 50 and 200°F (10 and 93°C) or use up and down arrows to adjust temperature. When finished, touch the green checkmark key to confirm change.

OPEN OVEN DOOR.

A buzzer will sound indicating the end of the cool down function. Press the red stop key or open the oven door to stop the buzzer.

AUXILIARY FUNCTIONS

REDUCED FAN SPEED

The reduced fan speed function is useful for flow-sensitive products such as soufflês and meringues, or any products affected by a high velocity of air movement.

SELECT DESIRED COOKING MODE AND SET MODE FUNCTIONS.

PRESS FAN SPEED ICON.

The FAN SPEED icon toggles between 100% and 50%.

PRESS THE GREEN START ARROW ICON TO BEGIN COOKING.

REDUCED POWER

The reduced power function can be used to reduce kitchen power peaks and energy consumption.

SELECT DESIRED COOKING MODE AND SET MODE FUNCTIONS.

PRESS REDUCED POWER ICON.

The REDUCED POWER icon will be highlighted.

PRESS THE GREEN START ARROW ICON TO BEGIN COOKING.

The oven will operate with reduced power in whatever cooking mode is set by the operator.

NOTE: Reduced power will result in longer cooking times.

MULTI-SHELF TIMER

The multi-shelf timer allows the operator to program different cook times for individual shelves.

SET COOKING MODE, TEMPERATURE AND TIME. The time set by the user will be the default time for each shelf timer.

PRESS THE MULTI-SHELF TIMER ICON.

ADJUST TIME SETTINGS FOR EACH SHELF AND PRESS GREEN CHECKMARK KEY TO CONFIRM CHANGE.

PRESS THE GREEN START ARROW ICON FOR EACH INDIVIDUAL SHELF. The unit will immediately start running in continuous operation mode.

When time expires for a shelf, the time background will turn red and an alarm will sound.

OPEN THE DOOR OR PRESS THE RED STOP BUTTON TO SILENCE ALARM. Remove food as appropriate.

STEAM INJECTION

Press to add moisture while in any cooking mode. Steam will inject into the cavity as long as the icon is touched.

OPERATING INSTRUCTIONS

CombiSmoker™ Procedures U.S. PAT. 7,157,668; EU PAT. 1659911

LOAD WOOD CHIPS.

- Measure one container full of dry wood chips.
- Soak dry chips in water for 5 minutes.
- Shake excess water off wood chips.
- Place moistened chips back into the container and position the container securely on the two prongs located on the interior back panel of the oven.

A full container of wood chips will produce smoke for an approximate period of one to two hours depending on the cooking temperature being used for the selected product. The preprogrammed CombiTouch recipes have been tested to ensure complete product smoke penetration and full smoke flavor.

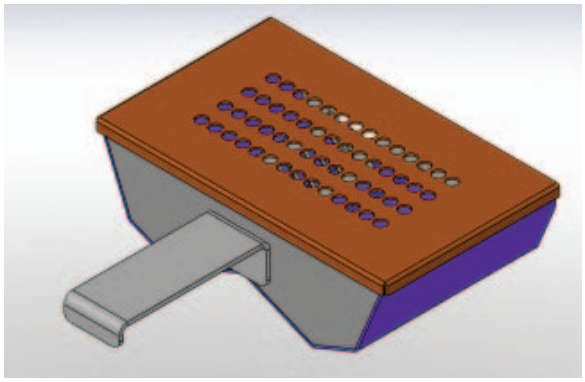

CHEF OPERATING TIP

Products such as ribs that require heavier smoke penetration to reach full smoke flavor should remain in the oven after cooking has been completed. Do not open the oven door.

Set the oven in the Low Temperature Steam Mode at 140° to 160°F (60° to 71°C) and allow the product to remain in the oven for a period of one hour.

If you would like assistance, you are invited to contact an Alto-Shaam corporate chef for recommendations.

NOTE: **Always keep the oven door closed whenever operating the smoking function.**

The CombiTouch CombiSmoker can be operated without using the smoking function. After using the oven as a smoker, however, it is necessary to clean the oven in order to prevent a transfer of smoke flavor to non-smoked products. Cleaning instructions are provided in this manual.

AVAILABLE FROM ALTO-SHAAM		
WOOD CHIPS	**20 pound bulk packs**	
THE TOTAL WEIGHT OF WOOD CHIP BULK PACKS MAY VARY DUE TO HIGH MOISTURE CONTENT WHEN PACKAGED.	**Apple**	**WC-22543**
	Hickory	**WC-2829**
	Cherry	**WC-22541**
	Sugar Maple	**WC-22545**

CAUTION

DO NOT **OPEN THE OVEN DOOR DURING THE SMOKING FUNCTION. The introduction of outside air in the oven compartment may cause the wood chips to flame.**

⚠ WARNING

THE USE OF IMPROPER MATERIALS FOR THE SMOKING FUNCTION COULD RESULT IN DAMAGE, HAZARD, EQUIPMENT FAILURE, OR COULD REDUCE THE OVERALL LIFE OF THE OVEN.

DO NOT USE SAWDUST FOR SMOKING. DO NOT USE WOOD CHIPS SMALLER THAN THUMBNAIL SIZE.

CombiSmoker™ Procedures

The ability to smoke product, hot or cold, is offered on all boiler-free electric models and on all gas models. The smoking function can be engaged in either the Combination mode or the Convection mode of operation. The smoking function cannot be operated when the oven is operating in the steam mode or the retherm mode.

SELECT CONVECTION OR COMBINATION COOKING MODE.

TO CHANGE THE TEMPERATURE:

TOUCH THE DISPLAYED TEMPERATURE.

Type desired temperature or use up and down arrows to adjust temperature then touch the green checkmark key to confirm.

TO COOK BY TIME:

TOUCH THE DISPLAYED TIME.

The cooking time will appear at the top the time selection window. Type in desired time period or use up and down arrows to adjust time. When finished, touch the green checkmark key to confirm change.

Or, to set Continuous Operation mode, type in --:-- and touch the green checkmark key to confirm.

TO ACTIVATE CombiSmoke:

Press the SMOKING icon. The icon will be highlighted on the screen.

PRESS THE GREEN START ARROW ICON TO BEGIN COOKING.

CAUTION

METAL PARTS OF THIS EQUIPMENT BECOME EXTREMELY HOT WHEN IN OPERATION. TO AVOID BURNS, ALWAYS USE HAND PROTECTION WHEN OPERATING THIS APPLIANCE.

PREPROGRAMMED RECIPES

The CombiTouch Combitherm comes preprogrammed with more than 100 recipes and photo icons, covering most commonly prepared food items. CombiTouch also allows you to save up to 250 of your recipes and uploaded photos.

Select RECIPE MODE from any screen.

Navigate to desired recipe icon using green NEXT and PREVIOUS SCREEN arrows. Press icon for desired recipe. Cooking steps will start immediately. (See 24-33 for a list of all preprogrammed recipes.)

MAIN MENU

COOKING MODE MENU

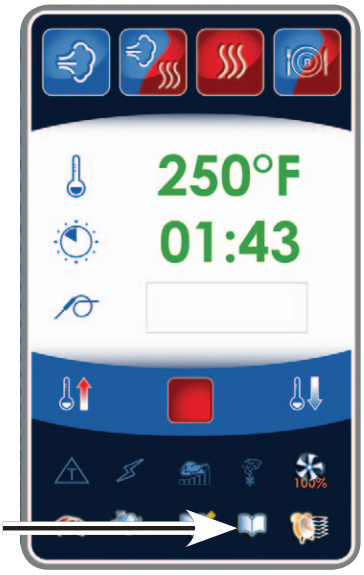

RECIPE MENU

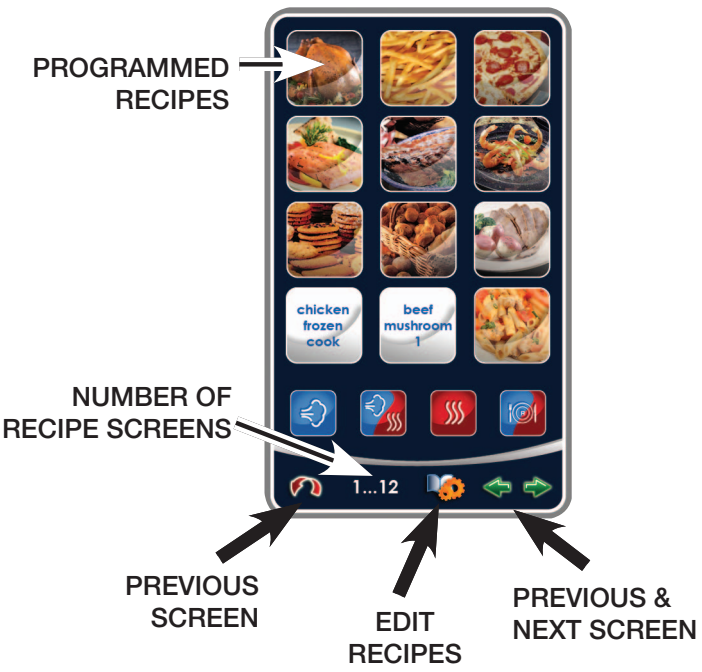

PROGRAM/EDIT RECIPES

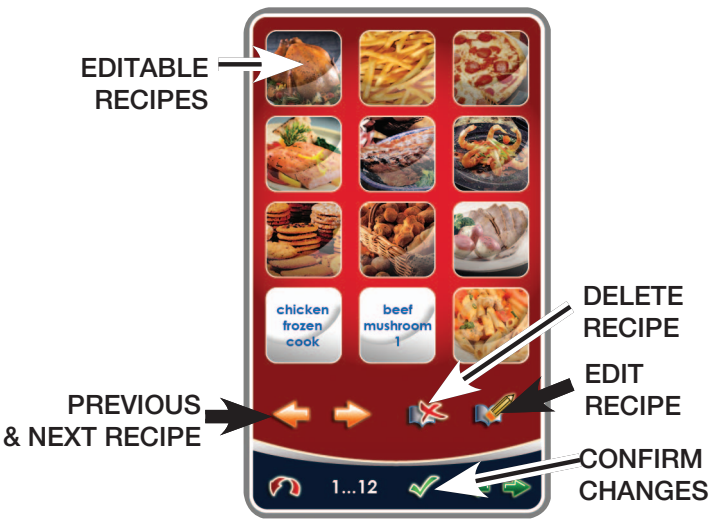

RECIPE PROGRAMMING VIA RECIPE MANAGEMENT SOFTWARE

The recipes can be edited, using the Touchscreen directly or with the Recipe Management Software. This Windows® based software and step-by-step instructions are available for download via the Alto-Shaam website.

http://www.alto-shaam.com/combitouch.aspx

RECIPE PROGRAMMING VIA THE TOUCHSCREEN

ADD A RECIPE

The recipe programming function allows the operator to program a cooking procedure using multiple cooking modes and any auxiliary functions desired. Recipes remain programmed until deleted by the operator.

1. Select any cooking mode.
2. Click ADD RECIPE icon.
3. Select first desired cooking mode. Last input temperature, time and probe setting will be displayed.
4. Change temperature, time and/or cook by probe as desired.
5. Change auxilary functions as desired (fan speed, Gold-N-Brown, etc.)
6. When finished with cooking step, press WRITE icon. Will display next cooking step programming screen.
7. Repeat steps 3 through 6 for each cooking step or proceed to step 8 if only one step in recipe.
8. When finished programming recipe, touch the CONFIRM CHANGES icon.
9. A keypad will appear. Input name of recipe and assign a picture. Touch the picture icon to display the picture instead of text on recipe menu. Press CONFIRM CHANGES icon.
10. The saved recipe will appear as the first recipe in the list.
11. Touch the newly saved recipe icon. Cooking steps in recipe will immediately start.

EDIT A RECIPE

To edit an existing default or user-programmed recipe:

1. Select RECIPE SETTINGS MODE from the Recipe Menu. The touch screen background will turn red to indicate that the user is in EDIT MODE.
2. Press the icon of the recipe to be edited. Selected recipe will be highlighted.
3. Press EDIT RECIPE. The first cooking step in the recipe will be displayed.

   Or click DELETE RECIPE to remove recipe.

   Click CONFIRM CHANGES to confirm deletion.
4. Edit cooking mode, temperature, time, probe temperature and/or auxilary functions.
5. Press CONFIRM CHANGES. A keyboard will appear. Edit the title as appropriate. Select a picture if desired, by pushing the picture icon to view the picture library.

   Press CONFIRM CHANGES at the bottom of the keyboard.
6. Press CONFIRM CHANGES at the bottom of the touch screen to exit EDIT RECIPE mode.

PREPROGRAMMED BAKERY RECIPES

Icon	Recipe	Oven Mode	Temp	Time	Fan Speed	Smoker	Browning
	Bakery retherm	Retherm	275°F (135°C)	4 minutes	100%	--	--
	Brownies	Convection	325°F (163°C)	25 minutes	100%	--	--
	Cinnamon Rolls	Combination	350°F (177°C)	20 minutes	100%	--	--
	Cookies	Convection	325°F (163°C)	12 minutes	50%	--	--
	Croissants	Combination	325°F (163°C)	15 minutes	50%	--	--
	Danish Pastry	Combination	350°F (177°C)	15 minutes	100%	--	--
	Dinner Rolls	Combination	350°F (177°C)	10 minutes	100%	--	--
	French Bread	Combination	350°F (177°C)	20 minutes	100%	--	--
	Fruit Bread	Combination	300°F (149°C)	50 minutes	100%	--	--
	Fruit Pie	Combination	340°F (171°C)	30 minutes	100%	--	--
	Muffins	Convection	325°F (163°C)	15 minutes	50%	--	--
	Par-baked Bread (frozen)	Combination	340°F (171 °C)	15 minutes	100%	--	--
	Par-baked Rolls	Combination	350°F (177°C)	10 minutes	100%	--	--
	Proofing	Low Temp Steam	90°F (32°C)	30 minutes	50%	--	--
	Puff Pastry	Combination	350°F (177°C)	10 minutes	100%	--	--
	Sheet Cake	Convection	325°F (163°C)	20 minutes	50%	--	--

PREPROGRAMMED CONVENIENCE PRODUCT RECIPES

Icon	Recipe	Oven Mode	Temp	Time	Fan Speed	Smoker	Browning Level
	Chicken Wings	Combination	400°F (204°C)	10 minutes	100%	--	2
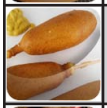	Corn Dogs	Combination	350°F (177°C)	18 minutes	100%	--	1
	Egg Rolls	Combination	375°F (191°C)	15 minutes	100%	--	3
	Frozen Entrée: Cabbage Rolls	Combination	350°F (177°C)	160°F probe (71°C)	100%	--	--
	Frozen Entrée: Chicken Primavera	Combination	350°F (177°C)	160 minutes	100%	--	--
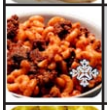	Frozen Entrée: Macaroni & Beef	Combination	350°F (177°C)	145 minutes	100%	--	--
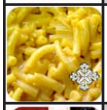	Frozen Entrée: Macaroni & Cheese	Combination	350°F (177°C)	140 minutes	100%	--	--
	Frozen Entrée: Meat Lasagna	Combination	350°F (177°C)	150 minutes	100%	--	--
	Frozen Entrée: Ratatouille	Combination	350°F (177°C)	35 minutes	100%	--	--
	Frozen Entrée: Stuffed Peppers	Combination	350°F (177°C)	150 minutes	100%	--	--
	Hamburger Patties - Frozen	Combination	350°F (177°C)	12 minutes	100%	--	4
	Hamburger Patties - Thawed	Combination	350°F (177°C)	5 minutes	100%	--	--
	Hot Dogs - Low Temp Steam	Low Temp Steam	160°F (71°C)	13 minutes	50%	--	--
	Hot Dogs - Steamed	Steam	212°F (100°C)	10 minutes	100%	--	--
	Mini Pizza	Combination	350°F (177°C)	10 minutes	100%	--	--
	Precooked Chicken Pieces - Frozen (MRB)	Convection	365°F (185°C)	30 minutes	100%	--	3

(CONTINUED ON NEXT PAGE)

PREPROGRAMMED CONVENIENCE PRODUCT RECIPES (CONTINUED)

Icon	Recipe	Oven Mode	Temp	Time	Fan Speed	Smoker	Browning Level
	Precooked Chicken Pieces - Refrigerated	Convection	325°F (163°C)	20 minutes	100%	--	1
	Spring Rolls	Combination	375°F (191°C)	15 minutes	100%	--	--
	Tater Tots	Combination	375°F (191°C)	10 minutes	100%	--	3

PREPROGRAMMED FISH & SEAFOOD RECIPES

Icon	Recipe	Oven Mode	Temp	Time	Fan Speed	Smoker	Browning Level
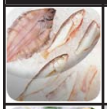	Baked Fish - Fresh	Combination	400°F (204°C)	6 minutes	100%	--	2
	Grilled Fish Fillets	Combination	460°F (238°C)	4 minutes	100%	--	--
	Lobster - Whole	Steam	195°F (91°C)	13 minutes	50%	--	--
	Salmon - Cold Smoked	(1) Convection	34°F (1°C)	15 minutes	50%	On	--
		(2) Convection	34°F (1°C)	30 minutes	50%	Off	--
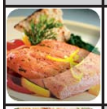	Salmon - Filets	Low Steam	145°F (63°C)	7 minutes	50%	--	--
	Salmon - Steaks	Steam	145°F (63°C)	8 minutes	100%	--	--
	Shrimp - Smoked	Convection	34°F (1°C)	10 minutes	50%	On	--
	Shrimp - Steamed	Low Steam	160°F (71°C)	12 minutes	50%	--	--

PREPROGRAMMED MEAT RECIPES

Icon	Recipe	Oven Mode	Temp	Time	Fan Speed	Smoker	Browning Level
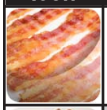	Bacon	Combination	375°F (191°C)	10 minutes	100%	--	--
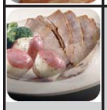	Beef Brisket - Smoked	(1) Combination	225°F (107°C)	90 minutes	50%	On	--
		(2) Combination	225°F (107°C)	180 minutes	50%	--	--
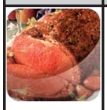	Beef Roast Cook & Hold	(1) Delta-T	125°F (52°C)	Probe 120°F (46°C)	50%	--	--
		(2) Steam	135°F (57°C)	Continuous	50%	--	2
	Beef Rounds - by Core Temp	Delta-T	130°F (54°C)	Probe 125°F (52°C)	100%	--	1
	Beef Rounds - by Time	Combination	250°F (121°C)	130 minutes	100%	--	--
	Beef Short Ribs	Combination	275°F (135°C)	90 minutes	100%	--	--
	Beef Short Ribs - Smoked	(1) Combination	275°F (135°C)	30 minutes	50%	On	--
		(2) Combination	275°F (135°C)	60 minutes	100%	--	--
	Beef Tenderloin	Combination	250°F (121°C)	Probe 125°F (52°C)	100%	--	2
	Beef Tri-tips	Combination	250°F (121°C)	Probe 125°F (52°C)	100%	--	3
	Breakfast Sausage Links	Combination	350°F (177°C)	8 minutes	100%	--	--
	Grilled Pork Chops	Combination	460°F (238°C)	6 minutes	100%	--	1
	Grilled Steaks	Combination	460°F (238°C)	Probe 130°F (54°C)	100%	--	--

(CONTINUED ON NEXT PAGE)

PREPROGRAMMED MEAT RECIPES (CONTINUED)

Icon	Recipe	Oven Mode	Temp	Time	Fan Speed	Smoker	Browning Level
	Ham - by Core Temp	Delta-T	125°F (52°C)	Probe 150°F (66°C)	50%	--	--
	Leg of Lamb - by Core Temp	Delta-T	125°F (52°C)	Probe 130°F (54°C)	100%	--	2
	Meat Loaf - by Core Temp	Combination	275°F (135°C)	Probe 155°F (68°C)	100%	--	3
	Pork - Back Ribs - Raw	Combination	250°F (121°C)	45 minutes	100%	--	--
	Pork - Back Ribs - Smoked	(1) Combination (2) Steam	250°F (121°C) 160°F (71°C)	60 minutes Continuous	100% 50%	On --	-- --
	Pork - Loin Roast - by Core Temp	Combination	300°F (149°C)	Probe 150°F (66°C)	100%	--	2
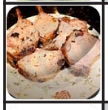	Pork Ribs Reheat	Combination	400°F (204°C)	7 minutes	100%	--	--
	Pork Shoulder - Smoked	(1) Combination (2) Combination	225°F (107°C) 225°F (107°C)	90 minutes Probe 185°F (85°C)	100%	On --	-- --
	Rack of Lamb - by Core Temp	Delta-T	130°F (54°C)	130 minutes	100%	--	2
	Sausage - Fresh - by Low Temp Steam	Low Temp Steam	160°F (71°C)	15 minutes	50%	--	--

PREPROGRAMMED MISCELLANEOUS RECIPES

Icon	Recipe	Oven Mode	Temp	Time	Fan Speed	Smoker	Browning Level
	Casseroles - by Core Temp	Combination	350°F (177°C)	Probe 150°F (66°C)	100%	--	--
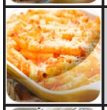	Casseroles - Time	Combination	350°F (177°C)	30 minutes	100%	--	--
	Custard/Crème Brulee	Low Temp Steam	190°F (88°C)	45 minutes	50%	--	1
	Eggs - Hardboiled	Steam	212°F (100°C)	12 minutes	100%	--	--
	Eggs - Poached - Low Temp Steam	Low Temp Steam	170°F (77°C)	5 minutes	50%	--	--
	Eggs - Poached - Steamed	Steam	212°F (100°C)	3 minutes	100%	--	--
	Eggs - Scrambled in bag; shake at 18 minutes	Steam	212°F (100°C)	25 minutes	100%	--	--
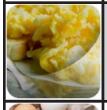	Eggs - Scrambled in pan	Steam	212°F (100°C)	15 minutes	100%	--	--
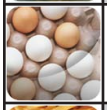	Eggs - Sous Vide	Steam	148°F (64°C)	45 minutes	50%	--	--
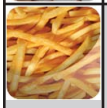	French Fries - Full Load	(1) Convection	400°F (204°C)	1 minute	100%	--	4
		(2) Combination	400°F (204°C)	9 minutes	100%	--	2
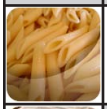	Pasta	Steam	212°F (100°C)	20 minutes	100%	--	--
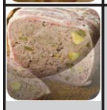	Pate en Croute - by Core Temp	(1) Convection	350°F (177°C)	10 minutes	100%	--	--
		(2) Combination	350°F (177°C)	Probe 135°F (57°C)	100%	--	--
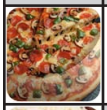	Pizza - Fresh	Combination	400°F (204°C)	10 minutes	50%	--	1
	Rice	Steam	212°F (100°C)	20 minutes	100%	--	--
	Soup in Bag	Steam	230°F (110°C)	50 minutes	100%	--	--
	Tamales	Steam	212°F (100°C)	30 minutes	100%	--	--

PREPROGRAMMED POULTRY RECIPES

Icon	Recipe	Oven Mode	Temp	Time	Fan Speed	Smoker	Browning Level
	Chicken - Frozen Pieces	Combination	350°F (177°C)	30 minutes	100%	--	3
	Chicken - Oven Fried Pieces	Combination	450°F (232°C)	18 minutes	100%	--	--
	Chicken - Thawed Whole	Combination	350°F (177°C)	35 minutes	100%	--	1
	Chicken - Thawed Whole - by Core Temp	Combination	350°F (177°C)	Probe 175°F (79°C)	100%	--	1
	Chicken - Whole Smoked	(1) Convection	34°F (1°C)	15 minutes	50%	On	--
		(2) Combination	350°F (177°C)	Probe 175°F (79°C)	50%	--	--
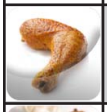	Chicken baked - Thawed Pieces	Combination	375°F (191°C)	Probe 170°F (77°C)	100%	--	2
	Duck Pieces - Raw	Combination	375°F (191°C)	25 minutes	100%	--	4
	Duck Whole - by Core Temp	(1) Combination	250°F (121°C)	15 minutes	100%	--	--
		(2) Combination	300°F (149°C)	10 minutes	100%	--	--
		(3) Combination	400°F (204°C)	Probe 175°F (79°C)	100%	--	3
	Galantine - by Core Temp	Low Temp Steam	160°F (71°C)	Probe 135°F (79°C)	50%	--	--
	Grilled Chicken Breasts	Combination	460°F (238°C)	6 minutes	100%	--	--
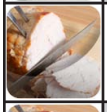	Turkey Breast - Precooked - by Time	Combination	275°F (135°C)	Probe 155°F (68°C)	50%	--	--
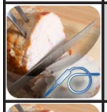	Turkey Breast - Raw - by Core Temp	Combination	275°F (135°C)	Probe 155°F (68°C)	50%	--	1
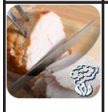	Turkey Breast - Smoked	(1) Combination	275°F (135°C)	60 minutes	50%	On	--
		(2) Combination	275°F (135°C)	Probe 155°F (68°C)	100%	--	--

PREPROGRAMMED VEGETABLE RECIPES

Icon	Recipe	Oven Mode	Temp	Time	Fan Speed	Smoker	Browning Level
	Asparagus - Fresh	Steam	190°F (88°C)	3 minutes	50%	--	--
	Asparagus - Frozen	Steam	212°F (100°C)	5 minutes	100%	--	--
	Baked Potatoes	Combination	350°F (177°C)	40 minutes	100%	--	1
	Beets - Fresh	Steam	230°F (110°C)	20 minutes	100%	--	--
	Broccoli - Fresh	Steam	212°F (100°C)	6 minutes	100%	--	--
	Broccoli - Frozen	Steam	212°F (100°C)	3 minutes	100%	--	--
	Brussel Sprouts - Frozen	Steam	212°F (100°C)	6 minutes	100%	--	--
	Cabbage - Fresh	Steam	212°F (100°C)	10 minutes	100%	--	--
	Carrots - Fresh	Steam	225°F (107°C)	10 minutes	100%	--	--
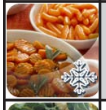	Carrots - Frozen	Steam	212°F (100°C)	6 minutes	100%	--	--
	Cauliflower - Fresh	Steam	212°F (100°C)	5 minutes	100%	--	--
	Cauliflower - Frozen	Steam	212°F (100°C)	4 minutes	100%	--	--
	Corn (Kernels) - Frozen	Steam	212°F (100°C)	4 minutes	100%	--	--
	Corn-on-the-Cob - Fresh	Steam	212°F (100°C)	14 minutes	100%	--	--
	Corn-on-the-Cob - Frozen	Steam	212°F (100°C)	10 minutes	100%	--	--

(CONTINUED ON NEXT PAGE)

PREPROGRAMMED VEGETABLE RECIPES (CONTINUED)

Icon	Recipe	Oven Mode	Temp	Time	Fan Speed	Smoker	Browning Level
	Green Beans - Fresh	Steam	212°F (100°C)	8 minutes	100%	--	--
	Green Beans - Frozen	Steam	212°F (100°C)	5 minutes	100%	--	--
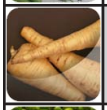	Parsnips - Fresh	Steam	230°F (110°C)	10 minutes	100%	--	--
	Peas - Frozen	Steam	212°F (100°C)	4 minutes	100%	--	--
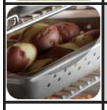	Potatoes, Red or Salad	Steam	212°F (100°C)	30 minutes	100%	--	--
	Squash - Fresh	Steam	212°F (100°C)	3 minutes	100%	--	--
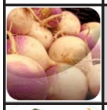	Turnips - Fresh	Steam	230°F (110°C)	10 minutes	100%	--	--
	Zucchini - Fresh	Steam	212°F (100°C)	3 minutes	100%	--	--

HACCP ACCESS

The CombiTouch Combitherm meets the requirements of established HACCP criteria by providing automated sampling, record keeping, set-point validation, recipe used, dates and time. Data is captured when Core Temperature Probe cooking method is chosen. This data is retained for the last 30 days. This information can be viewed on screen or downloaded to a USB drive and then copied to your computer. The file format is a text (.txt) file.

NOTE: You access this information from the Settings Screen. *See illustrations on page 2 and 3 for navigation.*

1. To download the data collected, remove the cap of a USB port located on the left side of the oven and insert the USB flash drive. If the flash drive is not recognized by the Combitherm, a question mark will appear on screen. Try again with another flash drive device or call Alto-Shaam Service.
2.

PRESS TO DOWNLOAD INFORMATION.
3. WAIT FOR THE ICON TO CHANGE FROM LOADING TO COMPLETE.
4. PRESS TO CONFIRM TRANSFER.
5. Remove the USB flash drive and replace the cap on the USB port located on the left side of the oven.

The download process will automatically create a folder on the USB flash drive titled “haccp”. Each text file contains cooking program specifics. *See illustration below.*

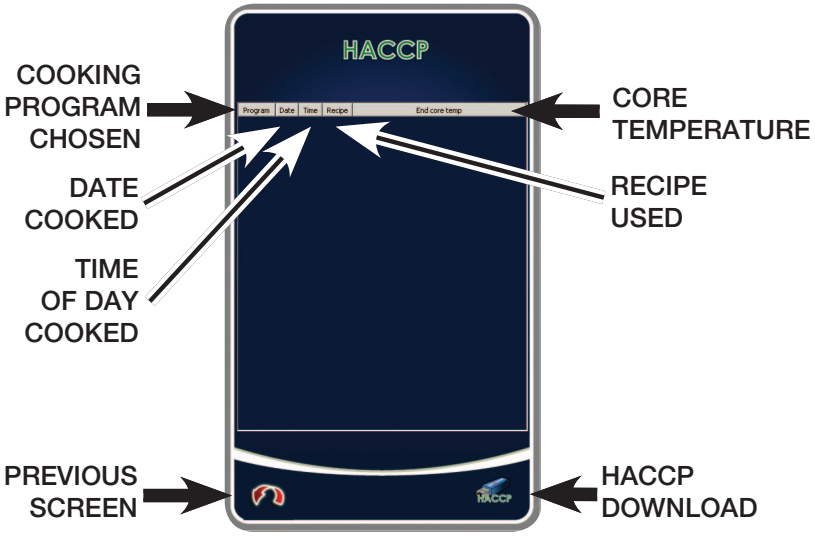


```
HACCP
Unit:                          00:30:D6:FF:28:63

Date:                          2011-01-09
Program:                       Steam

Start time:                    22:10:31
Stop time:                     22:14:37
Elapsed cook time:             00:04

Multi shelf timer:             no
Reduced energy:                no
Recipe active:                 no

Temperature unit:               °F

Cavity start temperature:      191
Cavity stop temperature:       217
Cavity temperature reached:    00:02

Core start temperature:        176
Core stop temperature:         215
Core temperature reached:      00:00

Door open count:               0
```

The CombiTouch Combitherm offers four (4) cleaning levels: rinse, light, normal, and heavy-duty cleaning. CombiClean tablets or Combitherm spray cleaner may be used. Side racks, shelves and trolleys may remain inside oven during cleaning.

SELECT CLEANING MODE FROM ANY SCREEN.

NOTE: If oven is too hot to safely clean, an oven with red interior will appear on the screen and the cool down function is automatically activated. Allow oven to cool to 200°F before cleaning.

PRESS GREEN WATER ON ICON TO CONFIRM THAT WATER SUPPLY IS TURNED ON.

CLEANING MODE MENU

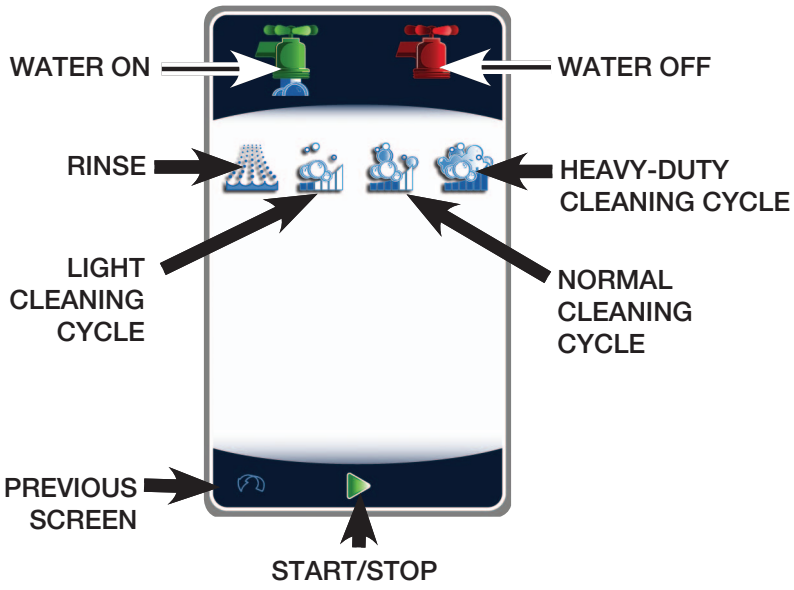

CLEANING IN PROCESS

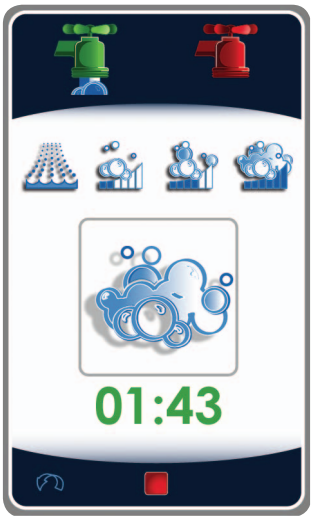

SELECT RINSE, LIGHT, NORMAL, OR HEAVY-DUTY CLEANING.

INSERT APPROPRIATE NUMBER OF COMBICLEAN TABLETS as directed by touchscreen or spray interior of oven with combi cleaner. User may add one additional tablet in either normal or heavy duty modes for particularly dirty ovens.

PRESS THE GREEN START ARROW ICON TO BEGIN CLEANING.

Leave door slightly ajar when cleaning is finished.

See CLEANING MODE MENU illustration below for additional cleaning mode information.

COMBI CLEANER REQUIREMENT

The number of required CombiClean tabs is shown via an animation

OVEN TOO HOT WARNING

Must allow oven to cool down before inserting CombiClean tabs or spraying with cleaner

CLEANING & MAINTENANCE

PREVENTATIVE MAINTENANCE

In addition to the routine cleaning and maintenance procedures, there are several additional steps to be taken for both sanitation and to keep the oven running efficiently. These additional safeguards will help prevent down time and costly repairs.

DO NOT DISPOSE OF GREASE, FAT, OR SOLID WASTE DOWN THE OVEN DRAIN.
Fats and solids will eventually coagulate in the drain system, causing blockage. Consequently, water will back-up into the condenser and interior oven compartment, resulting in an oven that is inoperable.

MAKE CERTAIN THE DRAIN SCREEN IS ALWAYS IN PLACE. REMOVE ANY SOLID WASTE MATERIAL FROM THE DRAIN SCREEN BEFORE IT ENTERS THE DRAIN SYSTEM.
The routine removal of solids from the drain screen will help prevent blockage.

USE THE AUTHORIZED COMBITHERM OVEN CLEANER ONLY.
The use of unauthorized cleaning agents may discolor or harm the interior surfaces of the oven.

TO PROLONG THE LIFE OF THE DOOR GASKET, CLEAN THIS ITEM DAILY.
The acids and related compounds found in fat, particularly chicken fat, will weaken the composition of the gasket unless cleaned on a daily basis. Wipe with a hot, soapy cloth.

TO ADDITIONALLY PROTECT GASKET LIFE, ALLOW OVEN DOOR TO REMAIN SLIGHTLY OPEN AT THE END OF THE PRODUCTION DAY.
An open door will relieve the pressure on the door gasket.

ROUTINELY CLEAN DOOR HINGES.
Open oven door to relieve tension. Clean all parts of the hinge.

CLEAN PRONGS OF REMOVABLE PROBE DAILY.
To ensure accurate internal product temperature readings, the prongs on the removable probe must be cleaned daily.

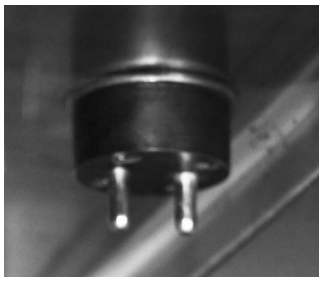

ROLL-IN CART/FOOD TROLLEY CLEANING (ON EQUIPPED MODELS)

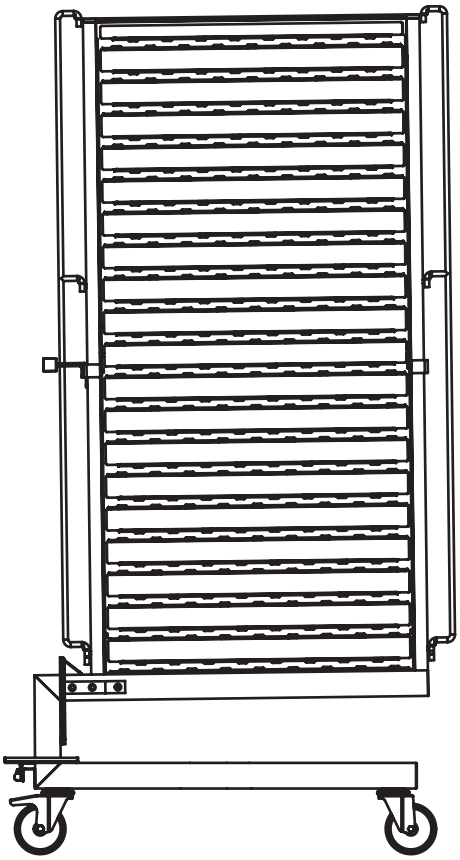

1. Remove food trolley to a cart wash area. Trolleys may be cleaned using any mild cleaning detergent and warm water.
2. Hand wipe all framing, slides, drip pan, and base. Thoroughly clean debris from the casters. A spray hose can be used for easier cart cleaning.
3. Remove detergent solution with warm water.
4. Wipe or spray with a sanitizing solution designed for use on metal and vinyl food contact surfaces.
5. Allow trolley to air dry.

As an alternative, trolleys can be cleaned while inside the oven. Allow the trolley to remain in the oven through the normal cleaning cycle, followed by steps 2 through 5 above.

CLEANING AND PREVENTIVE MAINTENANCE

PROTECTING STAINLESS STEEL SURFACES

It is important to guard against corrosion in the care of stainless steel surfaces. Harsh, corrosive, or inappropriate chemicals can completely destroy the protective surface layer of stainless steel. Abrasive pads, steel wool, or metal implements will abrade surfaces causing damage to this protective coating and will eventually result in areas of corrosion. Even water, particularly hard water that contains high to moderate concentrations of chloride, will cause oxidation and pitting that result in rust and corrosion. In addition, many acidic foods spilled and left to remain on metal surfaces are contributing factors that will corrode surfaces.

Proper cleaning agents, materials, and methods are vital to maintaining the appearance and life of this appliance. Spilled foods should be removed and the area wiped as soon as possible but at the very least, a minimum of once a day. Always thoroughly rinse surfaces after using a cleaning agent and wipe standing water as quickly

CLEANING AGENTS

Use non-abrasive cleaning products designed for use on stainless steel surfaces. Cleaning agents must be chloride-free compounds and must not contain quaternary salts. Never use hydrochloric acid (muriatic acid) on stainless steel surfaces. Always use the proper cleaning agent at the manufacturer's recommended strength. Contact your local cleaning supplier for product recommendations.

CLEANING MATERIALS

The cleaning function can usually be accomplished with the proper cleaning agent and a soft, clean cloth. When more aggressive methods must be employed, use a non-abrasive scouring pad on difficult areas and make certain to scrub with the visible grain of surface metal to avoid surface scratches. Never use wire brushes, metal scouring pads, or scrapers to remove food residue.

⚠ CAUTION

TO PROTECT STAINLESS STEEL SURFACES, COMPLETELY AVOID THE USE OF ABRASIVE CLEANING COMPOUNDS, CHLORIDE BASED CLEANERS, OR CLEANERS CONTAINING QUATERNARY SALTS. NEVER USE HYDROCHLORIC ACID (MURIATIC ACID) ON STAINLESS STEEL. NEVER USE WIRE BRUSHES, METAL SCOURING PADS OR SCRAPERS.

CLEANING & MAINTENANCE

CLEANING SCHEDULE

DAILY GASKET CLEANING

It is important to prolong the life of the oven gasket by cleaning on a daily basis. Routine cleaning will help protect the gasket from deterioration caused by acidic foods.

1. Allow the oven to cool, then wipe the gasket and crevices with clean cloth soaked in warm detergent solution.
2. Wipe the gasket and crevices with a cloth and clean rinse water.

Do not attempt to remove gasket or place in the dishwasher.

PROBE USAGE AND CLEANING

After each use of the **CORE TEMP** mode, wipe the probe tip with a clean paper towel to remove food debris. Follow by wiping the probe with a disposable alcohol pad. Return the probe to the proper door bracket position.

Probe Cleaning Procedures

1. Remove all food debris from probe between loads and at the end of each production shift. Wipe the entire probe, probe cable assembly, and probe holding bracket with a clean cloth and warm detergent solution.
2. Remove detergent by wiping the probe, cable, and bracket with a cloth and clean rinse water.
3. Wipe probe and probe bracket with disposable alcohol pad or sanitizing solution recommended for food contact surfaces.
4. Allow probe and cable to air dry in the probe holding bracket.
5. Wipe the probe with a disposable alcohol pad prior to inserting into a new food product.

DAILY OVEN CLEANING

To be performed at the end of the production day or between production shifts.

DAILY STEAM GENERATOR FLUSH

(Electric boiler equipped models only)
See next page for instructions

The steam generator must be flushed once a day when operating the oven on a regular basis. This procedure will prevent lime deposits and scale build-up from forming in the steam generator. A steam generator flush is automatically initiated during the cleaning function.

DAILY PRONG CLEANING

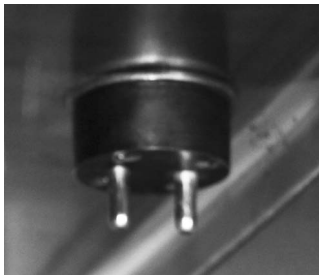

To ensure accurate internal product temperature readings, the prongs on the removable probe must be cleaned daily.

1. Remove all food debris from prongs at the end of each production shift. Wipe the entire prong casing, and between each prong with a clean cloth and warm detergent solution.
2. Remove detergent by wiping with a cloth and clean rinse water.
3. Allow to air dry before replacing detachable probe.

REGULAR DECALCIFICATION

(Electric boiler equipped models only)
Qualified service technician should see CombiTouch Technical Manual for instructions

It is important to decalcify the steam generator, particularly in areas with extremely hard water. In addition to the daily steam generator flush, this procedure should be performed once a month by a qualified service technician or more frequently depending on usage and water conditions.

MONTHLY CLEANING

1. Spray Head
2. Water Intake Filter
3. Drain Pipe

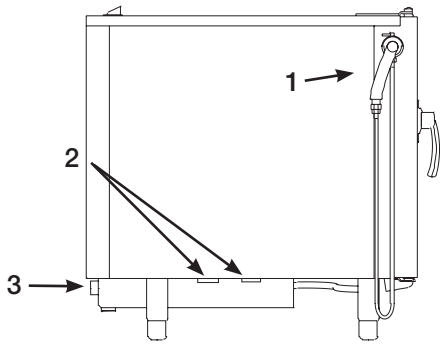

COMBICLEAN CLEANING AGENTS

⚠ DANGER

RUBBER GLOVES MUST BE WORN WHEN USING COMBICLEAN TABLETS OR SPRAY OVEN CLEANER.

NOTE: Use authorized Combitherm cleaner only.

Unauthorized cleaning agents may discolor or harm interior surfaces of the oven. Read and understand label and material safety data sheet before using the oven cleaner.

CAUTION: Causes eye, skin, and respiratory tract irritation. keep out of reach of children.

PRECAUTIONS:

- Do not take internally.
- Avoid contact with eyes and skin.
- Use rubber gloves when using this product.
- Wash hands thoroughly after handling.
- Avoid mixing with strong, concentrated acids.

FIRST AID:

Skin: Flush with water. Remove contaminated clothing and do not re-wear until washed. If irritation persists see a physician.

Eyes: Flush with water for 15 minutes. See a physician immediately.

Inhalation: If difficulty in breathing occurs, leave area immediately and do not return until dust is settled. If irritation persists, see a physician.

Ingestion: Drink large quantities of milk or water. DO NOT INDUCE VOMITING. See a physician immediately.

PROTECTIVE PACKAGING OF TABLETS WILL BEGIN TO DISSOLVE ONTO SKIN IF HANDLED WITH DAMP OR WET HANDS.

AUTOMATIC STEAM GENERATOR FLUSH

Flushing the electric Combitherm steam generator on a daily basis helps prolong the life of the steam generator heating elements and reduces the need for service. The CombiTouch provides this feature as an automatic function once every 24 hours.

The steam generator flush is automatically activated when the oven is powered on if no cleaning program has run during the last 24 hours. An indicator icon will notify the user that flushing is in process. This function cannot be manually turned on or off and users cannot start a cooking sequence during the generator flush. Wait until the flush cycle is finished, then begin to use the oven as normal.

If the operator cleans the oven daily, it will not automatically flush as this is one of the functions of the cleaning cycles.

DECALCIFICATION (ON BOILER EQUIPPED MODELS)

USING SCALEFREE™

DECALCIFICATION MUST BE PERFORMED BY A QUALIFIED SERVICE TECHNICIAN. QUALIFIED TECHNICIANS SHOULD REFER TO THE ALTO-SHAAM COMBITOUCH TECHNICAL MANUAL FOR DECALCIFICATION PROCEDURES.

ScaleFree™ Descaling Compound is an acid-based descaler combined with a proprietary chelating agent that is effective in dissolving and removing carbonate, lime-scale and iron-scale build-up caused by hard water. ScaleFree efficiently and effectively removes lime-scale build-up from combi ovens.

ScaleFree™ is a non-hazardous, Biodegradable Citrus Based Powder that when mixed with water becomes a powerful lime-scale remover.

DO NOT COOK IN ANY PROGRAM MODE WITH SCALEFREE™ IN THE STEAM GENERATOR SYSTEM.

TROUBLESHOOTING

EMERGENCY OPERATION MODE

If the oven malfunctions, an error code will appear in the display. In the event of an error, the Combitherm may be operated on a limited basis. Error conditions under which continued operation is possible are indicated by “Yes” in the chart on the next page. To operate the oven in the event of an error code:

PRESS THE START KEY TO ACKNOWLEDGE THE ERROR.

The icons that begin to flash represent operational modes that are still usable.

SELECT ONE OF THE AVAILABLE COOKING MODES

SET THE OVEN CONTROLS AS IF OPERATING UNDER NORMAL CIRCUMSTANCES.

Depending on the error code involved, oven function, such as temperature range, may be limited.

PRESS THE START ICON TO BEGIN THE COOKING.

PRESS THE STOP KEY WHEN THE TIMER EXPIRES.

The Combitherm will return to normal operation when the oven fault is corrected.

EMERGENCY OPERATION MODE (CONTINUED)

ERROR CODES

When the oven malfunctions, an error code will appear in the display.

PRESS THE START ICON TO ACKNOWLEDGE THE ERROR.

The icons that begin to flash represent operational modes that are still usable.
When the oven fault is corrected, the Combitherm will return to normal operation.

Error Code	Display Shows	Model		Mode			
		ES	ESG ESI	Steam	Combination	Convection	Retherm
E01	Low Water Boiler	Yes	No	No	No	To 365°F	No
E02	Control Temp High	Yes	Yes	No	No	No	No
E03	Fan Motor Error	Yes	Yes	No	No	No	No
E04	Fan Motor 2 Error	Yes	Yes	No	No	No	No
E11	Convection Temperature High	Yes	Yes	BOILER UNITS ONLY	No	No	No
E13	Boiler Temperature High	Yes	No	No	No	Yes	No
E15	Condenser Temperature High	Yes	Yes	No	No	To 356°F	No
E20	B11 Core Temperature Probe Single Point Fault - HACCP only	Yes	Yes	No	No	No	No
E21	N6 Cavity Probe Fault	Yes	Yes	BOILER UNITS ONLY	No	No	No
E22	B10 Core Temp Probe Fault	Yes	Yes	BY TIME ONLY	BY TIME ONLY	BY TIME ONLY	BY TIME ONLY
E23	B4 Boiler Probe Fault	Yes	No	No	No	No	No
E24	B5 Bypass Probe Fault	Yes	Yes	No	No	Yes	No
E25	B3 Condenser Probe Fault	Yes	Yes	Yes	No	To 356°F	No
E26	N8 Boiler Safety Temperature Probe Fault	Yes	No	No	No	No	No
E27	Boiler Element Temperature High	Yes	No	No	No	Yes	No
E34	Steam Generator Drain Pump Fault	Yes	No	No	No	No	No
E36	Steam Temperature High	Yes	No	No	No	Yes	No
E51	No Water in Boiler	Yes	No	No	No	Yes	No
E53	Fan Motor High Temperature	Yes	Yes	No	No	No	No
E54	Fan Motor 2 High Temperature	Yes	Yes	No	No	No	No
E55	Vent Not Open	Yes	Yes	Yes (NO BROWNING)	Yes (NO BROWNING)	Yes (NO BROWNING)	Yes (NO BROWNING)
E57	No Rinse Water	Yes	Yes	Yes	Yes	Yes	Yes
E93	Communication Error FROM Display Board	Yes	Yes	No	No	No	No
E94	Communication Error TO Display Board	Yes	Yes	No	No	No	No

TROUBLESHOOTING

CombiTouch ERROR CODES

This section is provided for the assistance of qualified technicians only and is not intended for use by untrained or unauthorized service personnel. If your Alto-Shaam® unit is not operating properly, check the following before calling your Authorized Alto-Shaam Service Agent:

☛ Check the power flow to the unit. Plug in outlet?

Do not attempt to repair or service the CombiOven beyond this point. Contact Alto-Shaam for the nearest authorized service agent. Repairs made by any other service agents without prior authorization by Alto-Shaam will void the warranty on the unit.

When the oven malfunctions, an error code will appear in the display.

PRESS THE START ICON TO ACKNOWLEDGE THE ERROR.

The icons that begin to flash represent operational modes that are still usable.
When the oven fault is corrected, the Combitherm will return to normal operation.

Error Code	Error Call Out in Display	Description of Error	Possible Cause
E01	Low Water Boiler	Low water level in boiler	— Water supply is shut off. — Low water pressure. — Generator drain cap missing or loose. — Generator drain pump is not sealing. — Generator drain pump elbow leaking. — Faulty or scaled water level probe. — Faulty or plugged dual solenoid valve assembly. — Wiring or connection issue. — No output to dual solenoid from relay board. — Relay board, high voltage is not operating.
E02	Control Temperature High	Relay board surface temperature too high	— Wiring or connection issue. — Cooling fan on Relay board assembly is not operating. — Cooling Fan on display board is not operating. — Main Cooling fan is not operating. — Cooling Fan on motor drive is not operating. — Unit is less than 20" from a heat producing source on its left hand side.
E03	Fan Motor Error	Fan motor does not work	— Exhaust hood is not operating properly. — Check LED flashes on the Motor Control. — **See Motor Control Error Code list.** — Connection Issue on Hall Effect sensor. — Fan whel is not operating. — Hall sensor does not detect motor rotation.
E04	Fan Motor 2 Error	Lower fan motor on 20•20 does not work	— Exhaust hood is not operating properly. — Check LED flashes on the Motor Control. — **See Motor Control Error Code list.** — Connection Issue on Hall Effect sensor. — Fan wheel is not operating. — Hall sensor does not detect motor rotation.
E11	Convection Temperature High	Excess oven temperature	Convection Mode & Combi Mode: — Convection Oven contactor(s) stuck closed. — N6 Oven Cavity Temperature probe defective. — N6 Cavity Probe connection problem. — Relay board, high voltage is not operating. — Wiring or connection issue. Combi Mode Only: — Insufficient water supply into oven for steam production.

(CONTINUED ON NEXT PAGE)

CombiTouch ERROR CODES

Error Code	Error Call Out in Display	Description of Error	Possible Cause
E13	**Boiler Temperature High**	**Boiler temperature overheats**	**— Scale build up inside steam generator.** **— Scale build up on water level probe.** **— B4 Probe connection problem.** **— B4 probe faulty.**
E15	**Condensor Temperature High**	**Excess condensor temperature**	**— Untreated water supply line is shut off.** **— Untreated water supply line is connected to warm water.** **— B3 probe connection problem.** **— B3 probe is faulty.** **— Single solenoid valve Y2 obstructed or faulty.** **— Wiring or connection problem.** **— Relay board, high voltage is not operating.**
E20	**HACCP Only - B11 Core Temperature Probe Single Point Fault** Error E20 is not shown in display. Instead a probe sign with "?" is shown as popup window. In case the customer cooks in time mode during first step and during second step switches to probe mode but has no probe in place, the error E20 will be shown in the error code list and HACCP list.	**Single point core temperature probe defect or disconnected.**	**— Clean Probe Receptacle Pins with sand paper.** **— B11 Single Point Core Temperature probe with quick connect, defective.** **— B11 Single Point Core Temperature probe wires with quick connect, disconnected.** **— B11 Single Point Core Temperature probe receptacle, defective.** **— B11 Single Point Core Temperature probe receptacle wires disconnected.**
E21	**N6 Cavity Probe Fault**	**Cavity temperature probe defect or disconnected**	**— N6 Oven Cavity Temperature probe defective.** **— N6 Oven Cavity Temperature connection problem.**
E22	**B10 Core Temperature Probe Multipoint Fault**	**Multipoint core temperature probe defect or disconnected**	**— B10 Multipoint Core Temperature probe defective.** **— B10 Multipoint Core Temperature probe connection problem.**
E23	**B4 Boiler Probe Fault**	**Boiler temperature probe defect or disconnected**	**— B4 Boiler temperature probe defective.** **— B4 probe wires connection problem.**
E24	**B5 Bypass Probe Fault**	**Bypass steam temperature probe defect or disconnected**	**— B5 Bypass steam temperature probe defective.** **— B5 Bypass steam temperature connection problem.**
E25	**B3 Condensor Probe Fault**	**Condensor water temperature probe defect or disconnected**	**— B3 Condensor temperature probe defective.** **— B3 Condensor probe connection problem.**
E26	**N8 Boiler Safety Temperature Probe Fault**	**Steam generator heating element protection probe defect or disconnected**	**— N8 Boiler temperature probe defective.** **— N8 probe connection problem.**
E27	**Boiler Element Temperature High**	**Excess steam generator safety probe**	**— Scale build up inside steam generator.** **— Scale build up on water level probe.** **— Water level probe connection failure.** **— N8 boiler temperature probe defective.** **— N8 probe connection problem.** **— Steam element contactor(s) stuck closed.** **— Wiring or connection problem.**

(CONTINUED ON NEXT PAGE)

TROUBLESHOOTING

CombiTouch ERROR CODES

Error Code	Error Call Out in Display	Description of Error	Possible Cause
E34	Steam Generator Drain Pump Fault	Water level in steam generator does not drop during cleaning program	— Scale build up inside the steam generator drain pump. — Scale build up inside the steam generator affecting water level probes. — Generator drain pump is faulty — Connection issue at drain pump. — No output to pump from relay board.
E36	Steam Temperature High	Oven cavity temperature is too high when operating in a steam mode or cleaning program	— Water supply is shut off. — Low water pressure. — Wiring or connection issue. — Water injection pipe obstructed. — Water flow control valve plugged or defective. — Dual solenoid valve Y-1 obstructed or defective. — No output to solenoid valve form relay board.
E51	No Water In Boiler	Water inside steam generator does not reach low water level	— Water supply is shut off. — Low water pressure. — Generator drain cap missing or loose. — Generator drain pump is not sealing. — Generator drain pump elbow leaking. — Faulty or scaled water level probe. — Faulty or plugged dual solenoid valve assembly. — Wiring or connection issue. — No output to dual solenoid from relay board.
E53	Fan Motor High Temperature	Fan motor too hot	— Exhaust hood is not operating properly. — Check LED flashes on the Motor Control. — **See Motor Control Error Code list.** — Connection Issue on Hall Effect sensor. — Fan wheel is not operating. — Hall sensor does not detect motor rotation.
E54	Fan Motor 2 High Temperature	20•20 lower fan motor too hot	— Exhaust hood is not operating properly. — Check LED flashes on the Motor Control. — **See Motor Control Error Code list.** — Connection Issue on Hall Effect sensor. — Fan wheel is not operating. — Hall sensor does not detect motor rotation.
E55	Vent not open	Browning valve does not open	— Alignment issue between motor cam and vent motor safety switch (micro switch). — Fault vent valve (motor). — Fault vent valve safety switch (micro switch). — Wiring or connection problem.

(CONTINUED ON NEXT PAGE)

CombiTouch ERROR CODES

Error Code	Error Call Out in Display	Description of Error	Possible Cause
E57	No rinse water	During rinse no water flow is detected through solenoid valve	— Water supply is shut off. — Low water pressure. — Check wiring to all components mentioned below. — Flow switch is dirty or defective. — Dual water solenoid valve obstructed or faulty (Y3.) — Relay board, high voltage, defective.
E93	Communication Error, FROM Display Board	Communication error between display board and low voltage relay board	— Check ribbon cable connections mentioned below. — Ribbon cable defective. — Relay board, low voltage, connector defective. — Display board connector defective.
E94	Communication Error, TO Display Board	Communication error between display board and low voltage relay board	— Check ribbon cable connections mentioned below. — Ribbon cable defective. — Relay board, low voltage, connector defective. — Display board connector defective.
E98	RB is in Cesius and DB is in Fahrenheit	Conflict of unit configuration in the setup menu	— Relay board and Data board do not match, use setup menu to change format.
E99	RB is in Fahrenheit and DB is in Cesius	Conflict of unit configuration in the setup menu	— Relay board and Data board do not match, use setup menu to change format.

(SEE MOTOR CONTROL ERROR CHART ON NEXT PAGE)

TROUBLESHOOTING

CombiTouch MOTOR CONTROL ERROR CODES

Type of Error	Indication	Release of Error
Undervoltage	LED flashing sequence, with 1 flash per period.	Voltage of intermediate circuit is less than 250V
Overvoltage	LED flashing sequence, with 2 flashes per period.	Voltage of intermediate circuit exceeds 445V
Excess Temperature	LED flashing sequence, with 3 flashes per period.	Temperature sensor in the power unit is more than 93°C
Overcurrent	LED flashing sequence, with 4 flashes per period.	Blocked motor, detected by current peak monitoring from 900 rpm rotating field
Overcurrent	LED flashing sequence, with 5 flashes per period.	Intermediate circuit current exceeds 4.0A
Short-circuit	LED flashing sequence, with 6 flashes per period.	Release of interrupt at intermediate circuit current larger than 53A
Power on	LED flashing sequence, with 7 flashes per period.	Effective mains voltage does not correspond to jumper setting 115V/230V
Watchdog	LED flashing sequence, with 8 flashes per period.	Watchdog of the microcontroller released, program crash

COMBITHERM PARTS

Rear and Left-Hand Side Service Parts 48
Plumbing Hoses 52
CombiClean™ Inner Tube and Nozzle 57
Condensation Tank 57
Sprayer Holder Assembly 58
Oven Light Assembly 58
Smoker Box Assembly 58
Hinge Assemblies 59
Touch Control 60
Routing of Ribbon Cable — Tabletop 62
Routing of Ribbon Cable — Floor-Standing 63
Combitherm Motor 64
CombiClean™ Motor Pump Assembly 65
Mechanical Parts – 6.10ESG, 10.10ESG, 7.14ESG 66
Mechanical Parts – 12.18ESG, 10.20ESG 67
Mechanical Parts – 20.20ESG 68
Right-Hand Door Assembly – 6.10ESG, 10.10ESG, 7.14ESG, 12.18ESG 69
Right-Hand Door Assembly – 10.20ESG, 20.20ESG 70
Left-Hand Door Assembly – 6.10ESG, 10.10ESG, 7.14ESG 71
Recessed Door Assembly – 6.10ESG, 10.10ESG, 7.14ESG, 12.18ESG 72
Recessed Door Track – 6.10ESG, 10.10ESG, 7.14ESG 73
Recessed Door Assembly – 10.20ESG, 20.20ESG 74
Recessed Door Track – 12.18ESG, 10.20ESG, 20.20ESG 75
Electrical Assemblies - 6.10ESG, 10.10ESG, 7.14ESG, 12.18ESG, 10.20ESG 76
Electrical Assemblies - 20.20ESG 77

Return to Main Table of Contents 1

PARTS INFORMATION

REAR AND LEFT-HAND SIDE SERVICE PARTS — 6.10ESG, 10.10ESG, 7.14ESG, 12.18ESG, 10.20ESG

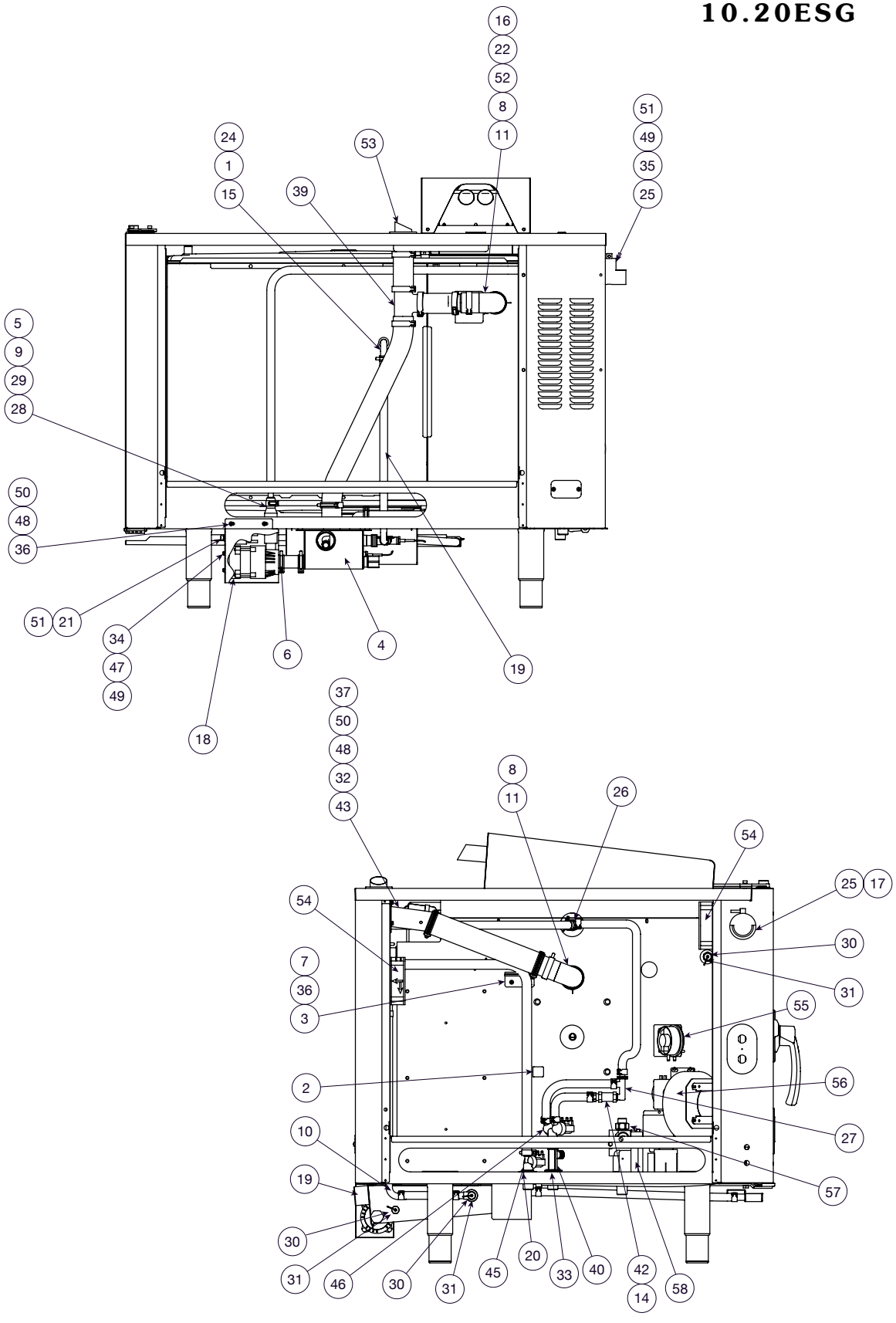

*NOT SHOWN

Item	Part	Service Parts Description	Qty.
1	1008395	Conical Washer	1
2	1008846	Bracket, Hose Guide	1
3	1010730	Bracket, Hose Guide	1
4	PB-28095	Condensor Tank	1
5	HO-27892	Hose, 7/8"	1
6	BG-29085	Bearing, Flanged Sleeve	2
7	BU-28391	Bushing, Socket Membrane	1
8	CM-29039	Clamp, Hose, 55mm	4
9	CM-29301	Clamp, Hose, 23mm	1
10	EB-22221	Elbow	1
11	EB-27207	Washer, Drain Support	2
12	FR-22496	Rubber "C" Gasket (not shown)	1.5'
13	FT-27406	Coupling, without Stop, 1.5"	1
14	FT-29124	Fitting, 1/2" Barb to 3/8" NPT Adaptor	1
15	FT-29263	Fitting	1
16	FT-29273	Fitting, Low Pressure	1
17	HO-27203	Hose, Hand Shower, 46" long	1
18	MO-34635	Pump, Circulation, 110V	1
	MO-34636	Pump, Circulation, 208-240V	1
19	HO-2957	Hose, Steam Bypass	1
20	NP-27538	Valve Holder Assembly	2
21	NU-22292	Hex Nut	1
22	NU-22759	Hex Nut	1
23*	NU-27107	Hex Nut Cap	1
24	NU-28710	Hex Jam Nut	1
25	PB-26960	Sprayer Holder	1
26	PB-27838	Plumbing, Nylon, 1/2" Y	1
27	PB-29162	Manifold, Injection Tube	1
28	PB-29289	Reducer Hose, 7/8" to 1/2"	1
29	PB-29489	Coupler, 1/2" to 1/2"	1
30	PR-33724	Thermocouple, Oven Temperature	1

Item	Part	Service Parts Description	Qty.
31	SA-25061	Thermocouple Probe	1
32	SA-26890	Seal, Vent Motor	1
33	SA-28149	O-Ring Seal	2
34	SC-22273	PH Pan Head Screw	2
35	SC-22766	Phillips Pan Head Screw	4
36	SC-22779	PH Pan Head Screw	5
37	SC-22926	Screw, M5 x 16	3
38*	SL-3836	Sleeve, Grommet Edging	1.1'
39	TE-24257	1-3/4" OD Copper Tee	1
40	TE-27204	Tee Valve	1
41	TU-22256	Tubing, Black PVC, Wire Sleeve	5'
42	VA-25549	Valve, Flow Control, 13 gpm	1
43	VA-26838	Vent Motor with Switch	1
44*	VA-29262	Low Pressure Valve	1
45	VA-34344	Valve, Single Port, 120V, Untreated	1
	VA-34300	Valve, Single Port, 208-240V, Untreated	1
46	VA-34461	Valve, Double Port, 120V, Treated	1
	VA-34045	Valve, Double Port, 208-240V, Treated	1
47	WS-22294	Washer, Flat	2
48	WS-22295	Washer, Flat	12
49	WS-22300	Washer, Split Lock	2
50	WS-22301	Washer, Split Lock	12
51	WS-24396	Washer, Serrated Bevel	1
52	WS-25092	Washer, Conical Seal	1
53	5004589	Vent Holder Assembly	1
54	FA-3599	Cooling Fan, 120V	2
	FA-3568	Cooling Fan, 208V	2
55	SW-34399	Switch, Air Pressure	1
56	FA-34396	Combustion Blower Motor, 80W	1
57	VA-34398	Gas Valve	1
58	BA-34397	Ignition Module	1

PARTS INFORMATION

REAR & LEFT-HAND SIDE SERVICE PARTS — 20.20ESG

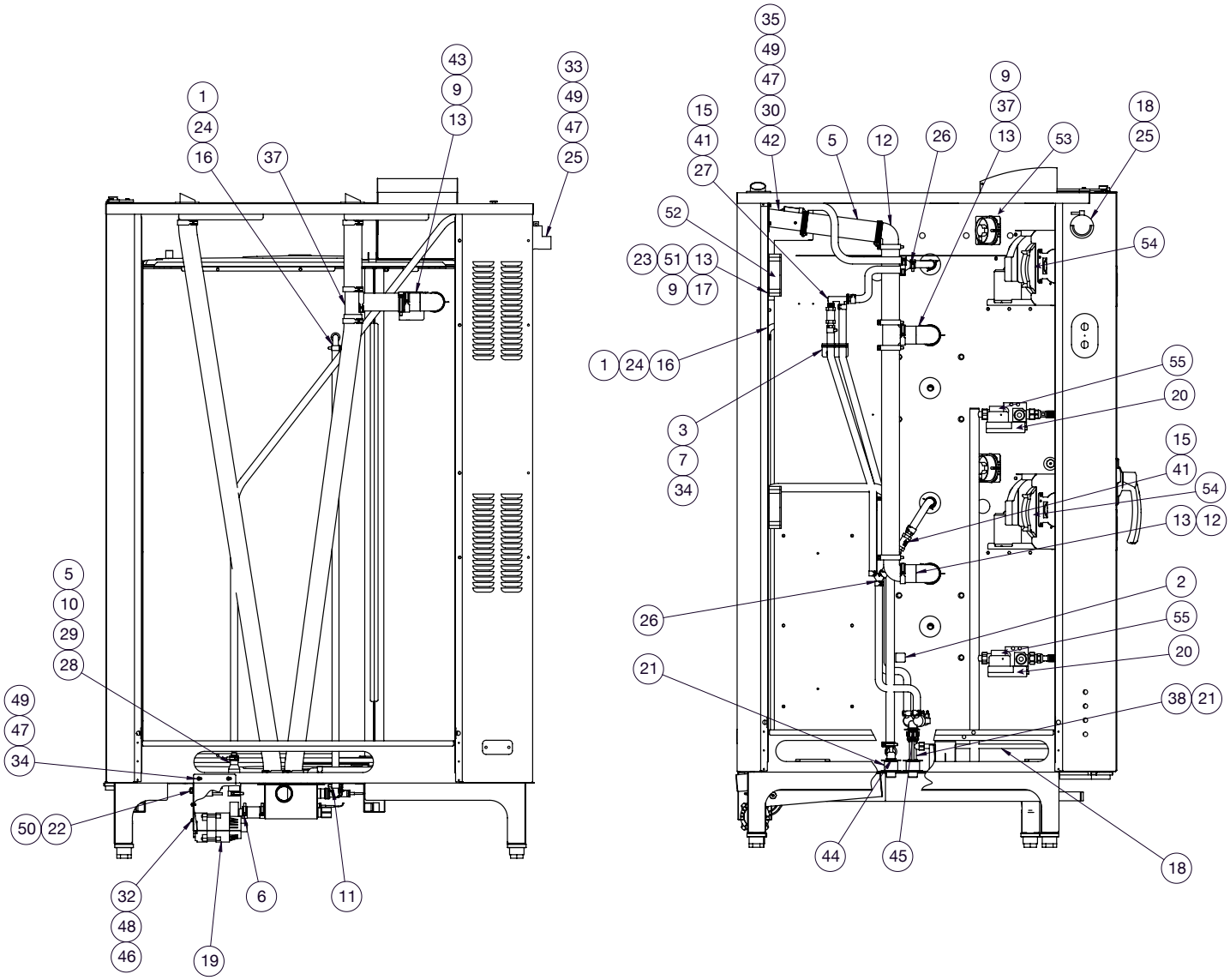

*NOT SHOWN

Item	Part	Service Parts Description	Qty.
1	1008395	Conical Washer Seal	1
2	1008846	Bracket, Hose Guide	1
3	1010730	Bracket, Hose Guide	2
4*	PB-28968	Condensor Tank – 20.20ESG	1
5	HO-27892	Hose, 7/8"	1
6	BG-29085	Bearing, Flanged Sleeve, Tube Support	2
7	BU-28391	Bushing, Socket Membrane	2
8	CM-29037	Clamp, Hose, 32mm	1
9	CM-29039	Clamp, Hose, 55mm	6
10	CM-29301	Clamp, Hose, 23mm	1
11	EB-22221	Elbow, Steam Bypass	1
12	EB-23949	Elbow, 1-1/2, 90 Degree, Copper	2
13	EB-27207	Elbow, 1-5/8"	3
14	FR-22496	Rubber “C” Gasket (not shown)	1
15	FT-29124	Fitting, 1/2" Barb to 3/8" NPT Adaptor	1
16	FT-29263	Fitting, Low Pressure	1
17	FT-29273	Fitting, Low Pressure	1
18	HO-27301	Hose, Hand Shower, Water Supply	1
19	MO-34635	Pump, Circulation, 110V	1
	MO-34636	Pump, Circulation, 208-240V	1
20	BA-34397	Ignition Module	1
21	NP-27538	Valve Holder Assembly	2
22	NU-22292	Hex Nut	1
23	NU-22759	Hex Nut	1
24	NU-28710	Hex Jam Nut	1
25	PB-26960	Sprayer Holder, Valve	1
26	PB-27838	Plumbing, Nylon, 1/2" Y	2
27	PB-29162	Manifold, Injection Tube	1
28	PB-29289	Reducer Hose, 7/8" to 1/2"	1

Item	Part	Service Parts Description	Qty.
29	PB-29489	Coupler, 1/2" to 1/2"	1
30	SA-26890	Seal, Vent Motor	1
31*	SA-28149	O-Ring Seal	2
32	SC-22273	PH Pan Head Screw	2
33	SC-22766	Phillips Pan Head Screw	4
34	SC-22779	PH Pan Head Screw	7
35	SC-22926	Screw, M5 x 16	3
36*	SL-3836	Sleeve, Grommet Edging	1.1’
37	TE-24257	1-3/4" OD Copper Tee	2
38	TE-27204	Tee Valve	1
39*	TU-22256	Tubing, Black PVC, Wire Sleeve	15’
40*	TU-28163	Tubing, Vacuum	13’
41	VA-27837	Valve, Flow Control, 35 gpm	2
42	VA-26838	Vent Motor with Switch	1
43	VA-29262	Low Pressure Valve	1
44	VA-34344	Valve, Single Port, 120V, Untreated	1
	VA-34300	Valve, Single Port, 208-240V, Untreated	1
45	VA-34461	Valve, Double Port, 120V, Treated	1
	VA-34045	Valve, Double Port, 208-240V, Treated	1
46	WS-22294	Washer, Flat	2
47	WS-22295	Washer, Flat	14
48	WS-22300	Washer, Split Lock	2
49	WS-22301	Washer, Split Lock	14
50	WS-24396	Washer, Serrated Bevel	1
51	WS-25092	Washer, Conical, Seal	1
52	FA-3599	Cooling Fan, 120V	1
	FA-3568	Cooling Fan, 208V	1
53	SW-34399	Switch, Air Pressure	1
54	FA-34395	Combustion Blower Motor	1
55	VA-34398	Gas Valve	1

PARTS INFORMATION

PLUMBING HOSES — 6.10ESG

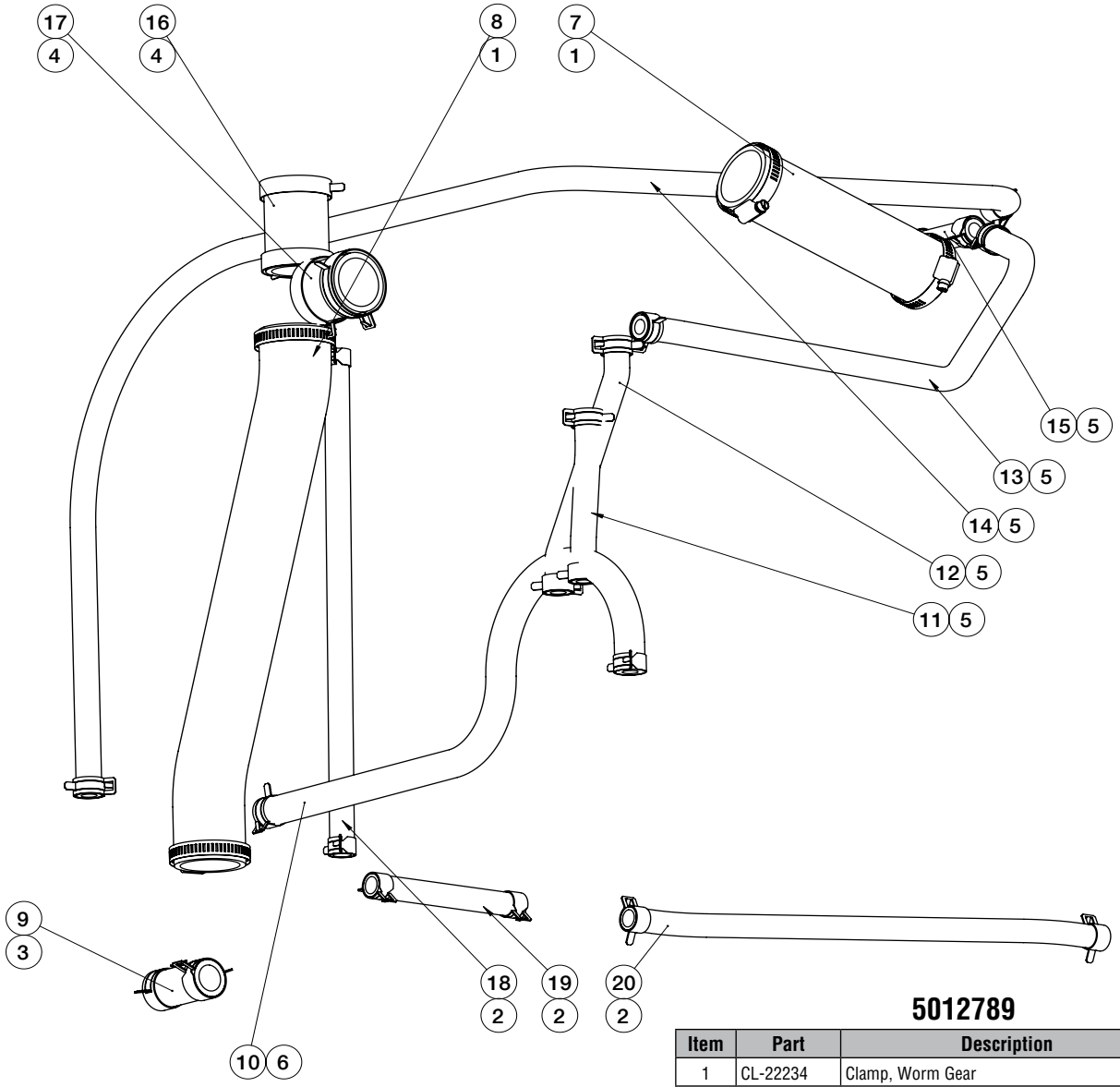

5012789

Item	Part	Description	Qty.
1	CL-22234	Clamp, Worm Gear	4
2	CM-28145	Clamp, Hose, 20mm	6
3	CM-29037	Clamp, Hose, 32mm	4
4	CM-29039	Clamp, Hose, 55mm	4
5	CM-29301	Clamp, Hose, 23mm	10
6	FT-28124	Clamp, Hose, 24mm	2
7	HO-27891	Hose, 1-7/8", 8.5" long	1
8	HO-27891	Hose, 1-7/8", 18" long	1
9	HO-27892	Hose, 7/8", 2.5" long	1
10	HO-27893	Hose, 1/2", 30" long	1
11	HO-22255	Hose, 1/2" Hi-Temp Silicon, 11" long	1
12	HO-22255	Hose, 1/2" Hi-Temp Silicon, 13" long	1
13	HO-22255	Hose, 1/2" Hi-Temp Silicon, 17" long	1
14	HO-22255	Hose, 1/2" Hi-Temp Silicon, 47" long	1
15	HO-22255	Hose, 1/2" Hi-Temp Silicon, 3" long	1
16	HO-29435	Hose, 1-5/8", 4.5" long	1
17	HO-29435	Hose, 1-5/8", 2.25" long	1
18	HO-2957	Hose, Translucent Silicon, 17" long	1
19	HO-2957	Hose, Translucent Silicon, 6" long	1
20	HO-2957	Hose, Translucent Silicon, 14" long	1

PLUMBING HOSES — 10.10ESG

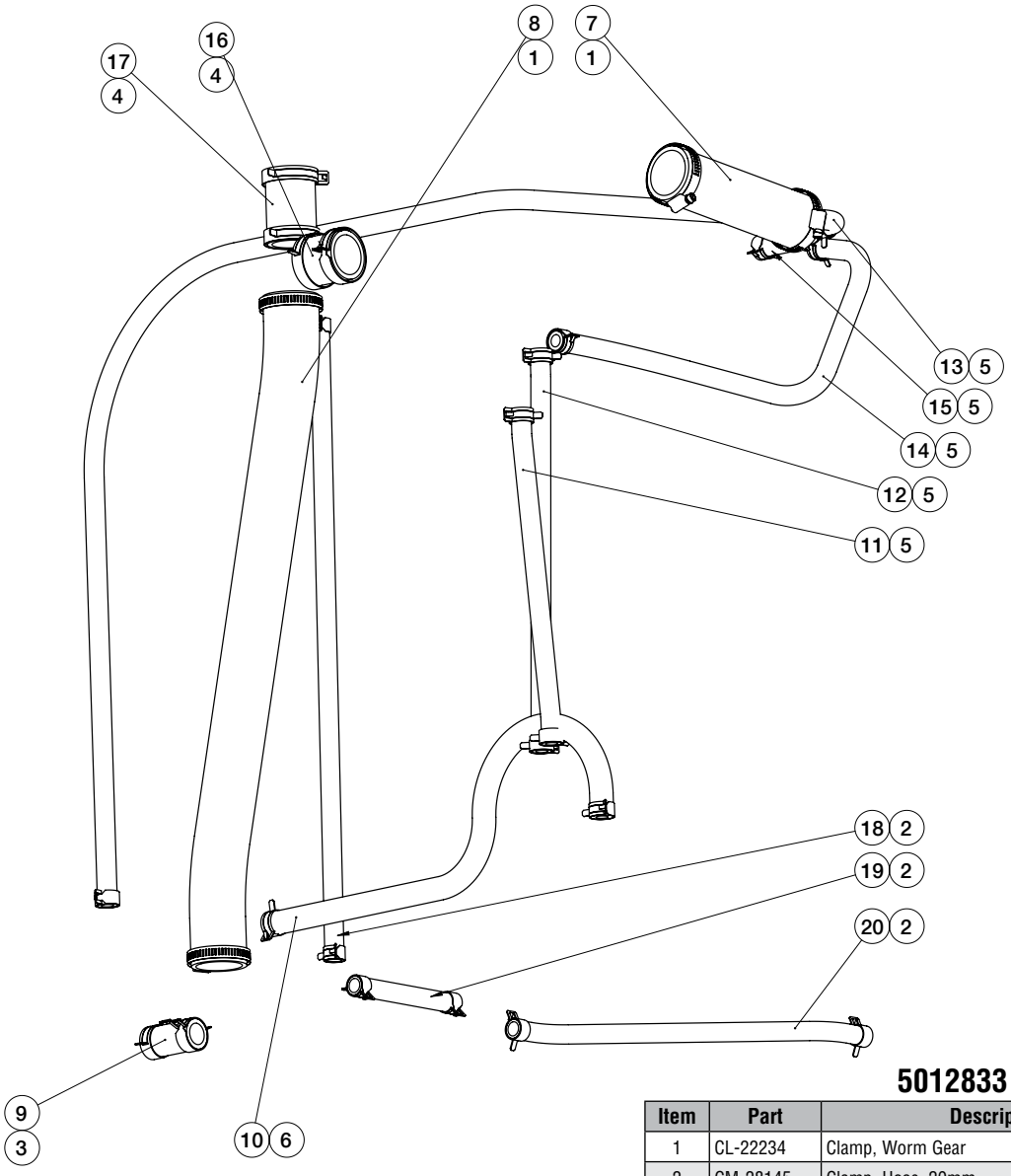

5012833

Item	Part	Description	Qty.
1	CL-22234	Clamp, Worm Gear	4
2	CM-28145	Clamp, Hose, 20mm	6
3	CM-29037	Clamp, Hose, 32mm	4
4	CM-29039	Clamp, Hose, 55mm	4
5	CM-29301	Clamp, Hose, 23mm	10
6	FT-28124	Clamp, Hose, 24mm	2
7	HO-27891	Hose, 1-7/8", 8.5" long	1
8	HO-27891	Hose, 1-7/8", 28" long	1
9	HO-27892	Hose, 7/8", 2.5" long	1
10	HO-27893	Hose, 1/2", 30" long	1
11	HO-22255	Hose, 1/2" Hi-Temp Silicon, 21" long	1
12	HO-22255	Hose, 1/2" Hi-Temp Silicon, 23" long	1
13	HO-22255	Hose, 1/2" Hi-Temp Silicon, 52" long	1
14	HO-22255	Hose, 1/2" Hi-Temp Silicon, 15" long	1
15	HO-22255	Hose, 1/2" Hi-Temp Silicon, 3" long	1
16	HO-29435	Hose, 1-5/8", 2.25" long	1
17	HO-29435	Hose, 1-5/8", 4.5" long	1
18	HO-2957	Hose, Translucent Silicon, 25" long	1
19	HO-2957	Hose, Translucent Silicon, 6" long	1
20	HO-2957	Hose, Translucent Silicon, 14" long	1

PARTS INFORMATION

PLUMBING HOSES — 7.14ESG

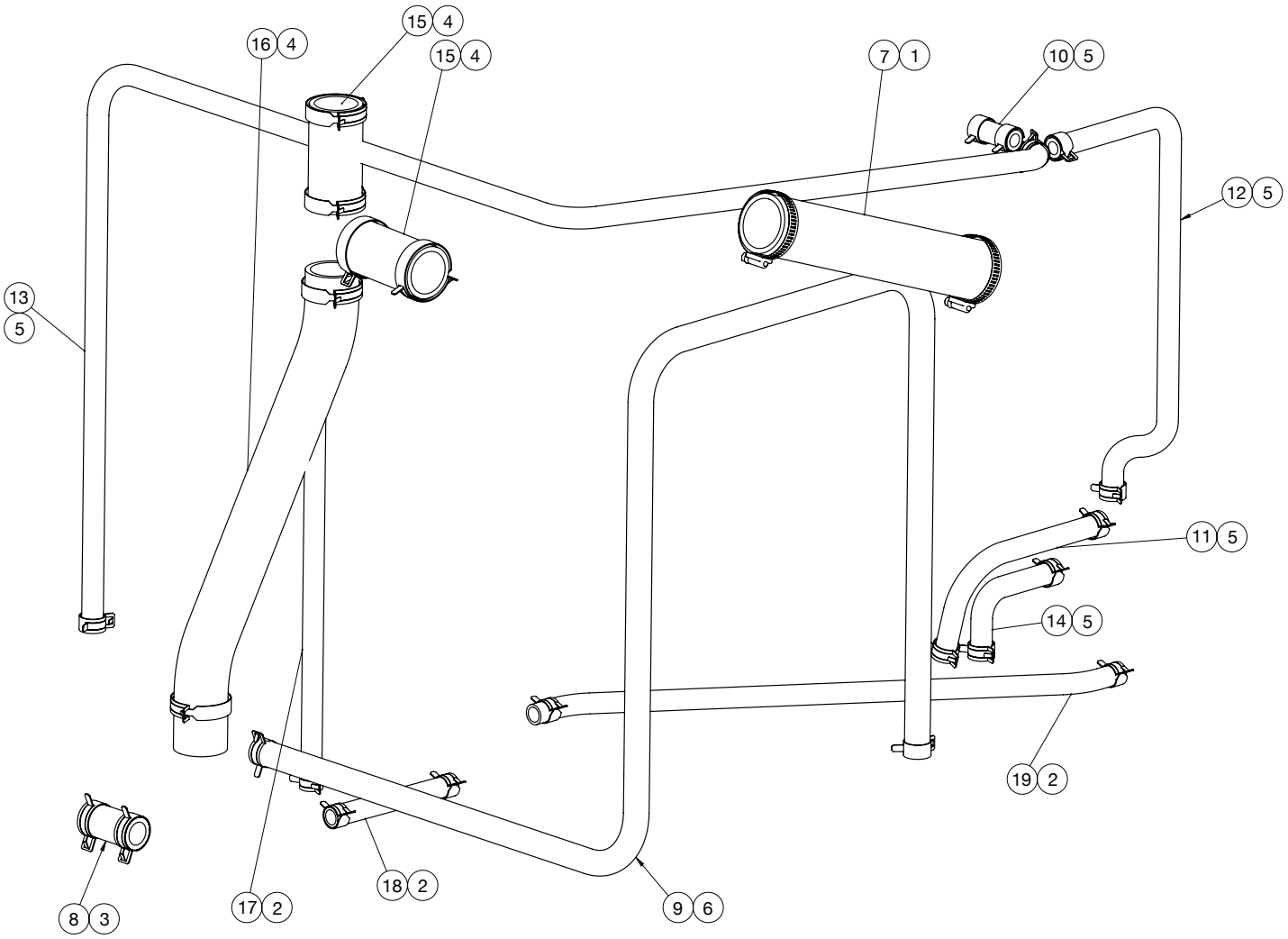

5012291

Item	Part	Description	Qty.
1	CL-22234	Clamp, Worm Gear	2
2	CM-28145	Clamp, Hose, 20mm	6
3	CM-29037	Clamp, Hose, 32mm	4
4	CM-29039	Clamp, Hose, 55mm	6
5	CM-29301	Clamp, Hose, 23mm	10
6	FT-28124	Clamp, Hose, 24mm	2
7	HO-27891	Hose, 1-7/8", 12.5" long	1
8	HO-27892	Hose, 7/8", 2.5" long	1
9	HO-27893	Hose, 1/2", 60" long	1
10	HO-22255	Hose, 1/2" Hi-Temp Silicon, 2" long	1
11	HO-22255	Hose, 1/2" Hi-Temp Silicon, 9" long	1
12	HO-22255	Hose, 1/2" Hi-Temp Silicon, 15.5" long	1
13	HO-22255	Hose, 1/2" Hi-Temp Silicon, 60" long	1
14	HO-22255	Hose, 1/2" Hi-Temp Silicon, 5.5" long	1
15	HO-29435	Hose, 1-5/8", 5" long	2
16	HO-29435	Hose, 1-5/8", 23" long	1
17	HO-2957	Hose, Translucent Silicon, 17" long	1
18	HO-2957	Hose, Translucent Silicon, 6" long	1
19	HO-2957	Hose, Translucent Silicon, 22" long	1

PLUMBING HOSES — 12.18ESG, 10.20ESG

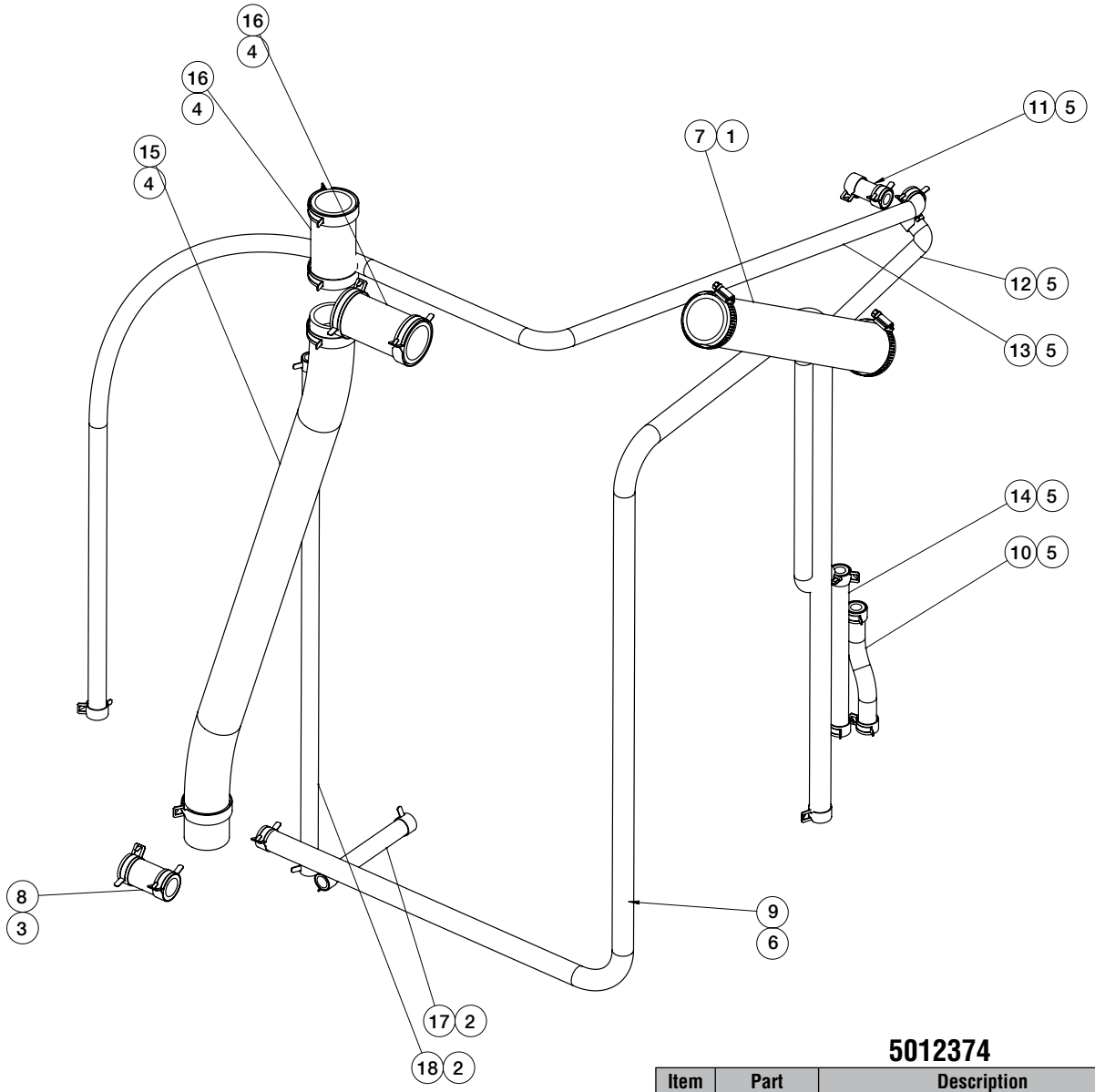

5012374

Item	Part	Description	Qty.
1	CL-22234	Clamp, Worm Gear	2
2	CM-28145	Clamp, Hose, 20mm	4
3	CM-29037	Clamp, Hose, 32mm	4
4	CM-29039	Clamp, Hose, 55mm	6
5	CM-29301	Clamp, Hose, 23mm	10
6	FT-28124	Clamp, Hose, 24mm	2
7	HO-27891	Hose, 1-7/8", 15" long	1
8	HO-27892	Hose, 7/8", 2.5" long	1
9	HO-27893	Hose, 1/2", 80" long	1
10	HO-22255	Hose, 1/2" Hi-Temp Silicon, 5.5" long	1
11	HO-22255	Hose, 1/2" Hi-Temp Silicon, 2" long	1
12	HO-22255	Hose, 1/2" Hi-Temp Silicon, 25" long	1
13	HO-22255	Hose, 1/2" Hi-Temp Silicon, 65" long	1
14	HO-22255	Hose, 1/2" Hi-Temp Silicon, 9" long	1
15	HO-29435	Hose, 1-5/8", 33" long	1
16	HO-29435	Hose, 1-5/8", 5" long	2
17	HO-2957	Hose, Translucent Silicon, 6" long	1
18	HO-2957	Hose, Translucent Silicon, 27" long	1

PARTS INFORMATION

PLUMBING HOSES — 20.20ESG

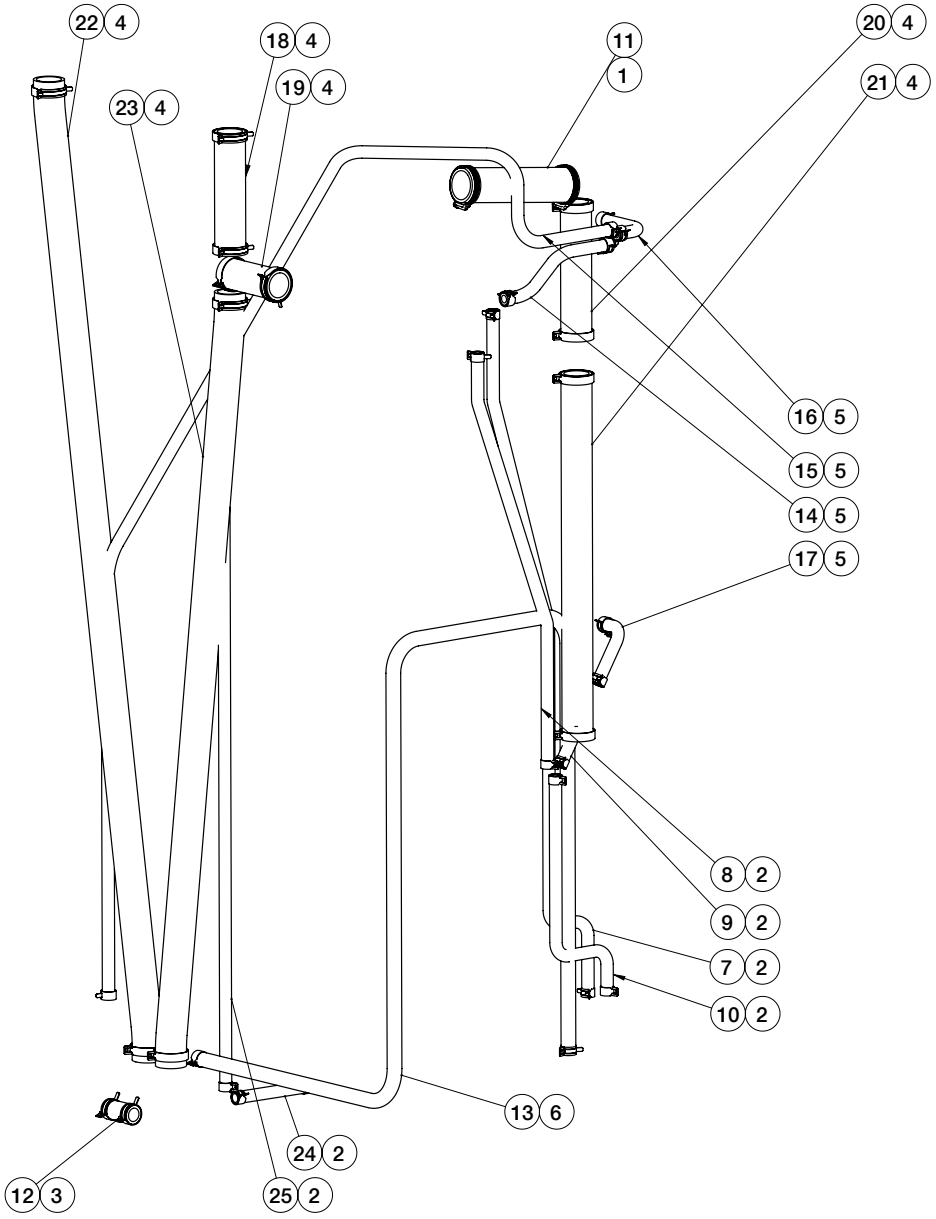

5012312

Item	Part	Description	Qty.
1	CL-22234	Clamp, Worm Gear	2
2	CM-28145	Clamp, Hose, 20mm	12
3	CM-29037	Clamp, Hose, 32mm	4
4	CM-29039	Clamp, Hose, 55mm	12
5	CM-29301	Clamp, Hose, 23mm	8
6	FT-28124	Clamp, Hose, 24mm	2
7	HO-22255	Hose, 1/2" Flexible Clear, 47" long	1
8	HO-22255	Hose, 1/2" Flexible Clear, 25" long	1
9	HO-22255	Hose, 1/2" Flexible Clear, 4" long	1
10	HO-22255	Hose, 1/2" Flexible Clear, 18" long	1
11	HO-27891	Hose, 1-7/8", 9.5" long	1
12	HO-27892	Hose, 7/8", 2.5" long	1

Item	Part	Description	Qty.
13	HO-27893	Hose, 1/2", 80" long	1
14	HO-22255	Hose, 1/2", Hi-Temp Silicon, 7" long	1
15	HO-22255	Hose, 1/2" Hi-Temp Silicon, 84" long	1
16	HO-22255	Hose, 1/2" Hi-Temp Silicon, 5" long	1
17	HO-22255	Hose, 1/2" Hi-Temp Silicon, 6" long	1
18	HO-29435	Hose, 1-5/8", 9" long	1
19	HO-29435	Hose, 1-5/8", 5" long	1
20	HO-29435	Hose, 1-5/8", 9.5" long	1
21	HO-29435	Hose, 1-5/8", 25" long	1
22	HO-29435	Hose, 1-5/8", 65" long	1
23	HO-29435	Hose, 1-5/8", 53" long	1
24	HO-2957	Hose, Translucent Silicon, 6" long	1
25	HO-2957	Hose, Translucent Silicon, 50" long	1

COMBICLEAN™ INNER TUBE & WASH NOZZLE

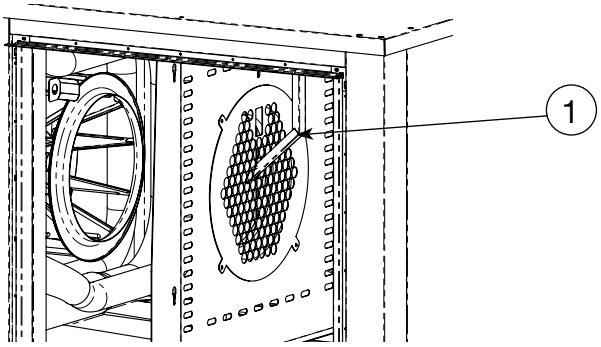

Item	Part	CombiClean Wash Nozzle Description	Qty.
1	PB-28782	Water Injection Tube, 6.10ESG, 10.10ESG	1
	PB-27729	Water Injection Tube, 7.14ESG	1
	PB-27730	Water Injection Tube, 12.18ESG, 10.20ESG	1
	PB-27730	Water Injection Tube, 20.20ESG	2
2	1001204	Disintegration Box (not shown)	1
3	SC-23737	Screw, M5 Hex Head for Disintegration Box (not shown)	1

CONDENSATION TANK

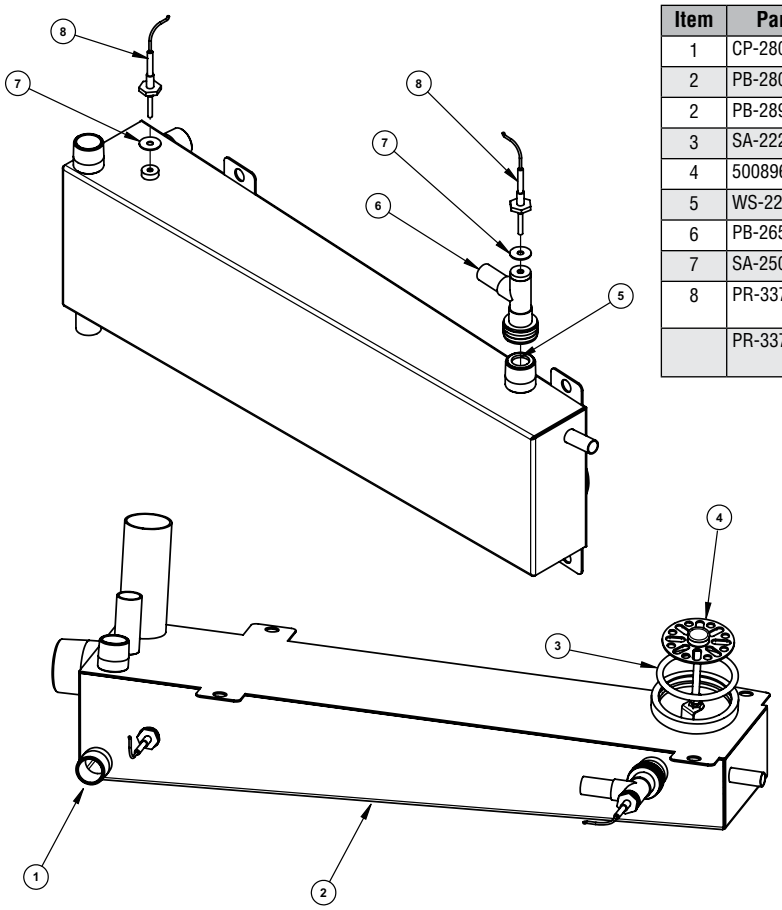

Item	Part	Description	Qty.
1	CP-28016	Drain Cap	1
2	PB-28095	Condensor Tank – 6.10ESG, 10.10ESG, 7.14ESG, 10.20ESG, 12.18ESG	1
2	PB-28968	Condensor Tank – 20.20ESG	1
3	SA-22212	O-Ring, Red, Silicone 70 Durometer, 225 C, 59.6 x 5.33mm	1
4	5008964	Drain Screen	1
5	WS-22207	Seal, 3/4 x 2, Flat Vulcan Fiber	1
6	PB-26512	Measure Probe	1
7	SA-25061	T-Couple Probe, Combitherm	2
8	PR-33724	Combitherm, Thermocouple, 1650mm Wire Length: 6.10ESG, 10.10ESG, 7.14ESG	2
	PR-33751	Combitherm, Thermocouple, 3050mm Wire Length: 10.20ESG, 12.18ESG, 20.20ESG	2

PARTS INFORMATION

SPRAYER HOLDER ASSEMBLY

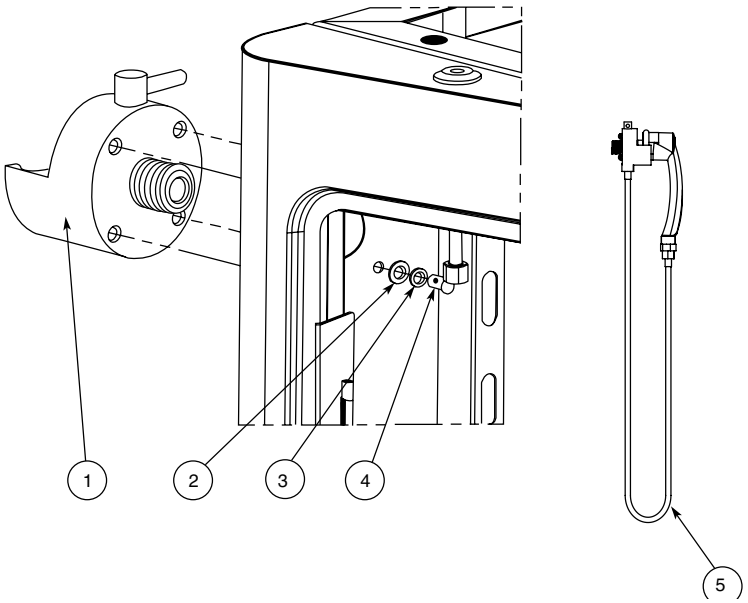

Item	Part	Description	Qty.
1	PB-26960	Hand Shower Holder	1
2	WS-22295	Flat Washer	4
3	WS-22301	Locking Washer	4
4	SC-22766	Philips Screw	4
5	HO-26964	Hand Shower Hose (6.10, 7.14, 10.20, 12.18)	1
	HO-26965	Hand Shower Hose (20.20)	1
6	WS-29074	Hand Shower Hose Washer	1
7	5011315	Hand Shower Sprayer Kit	1

OVEN LIGHT

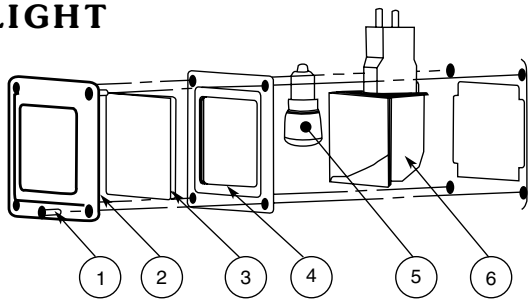

Item	Part	Description	Qty.
1	SC-23141	Screw	4
2	CV-26607	Oven Light Cover	1
3	GL-26608	Oven Light Glass	1
4	GS-26609	Oven Light Gasket	1
5	LP-34206	Light, 25W Bulb	1
	LP-34205	Light, 25W Bulb, 120V	1
6	LP-34161	Light, Snap-In	1

SMOKER CHIP TRAY ASSEMBLY

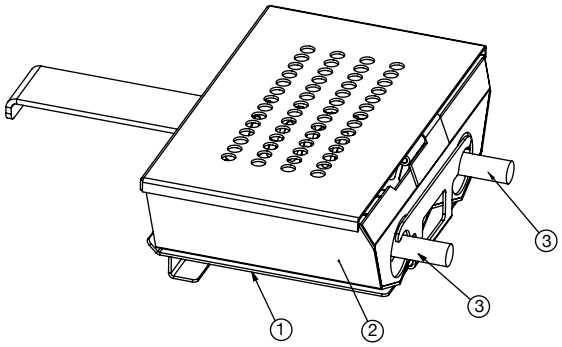

Item	Part	Description	Qty.
1	1010231	Smoker Box Holder	1
2	5005669	Chip Tray with Handle	1
3	EL-34554	Element, Smoker Heater, 208V/260W	2
	EL-34553	Element, Smoker Heater, 110V/260W	2
4*	1007141	Smoke Tray Insert	2
5*	CE-26277	Cleaner Kit, Smoker	1

*NOT SHOWN

TOP HINGE ASSEMBLY

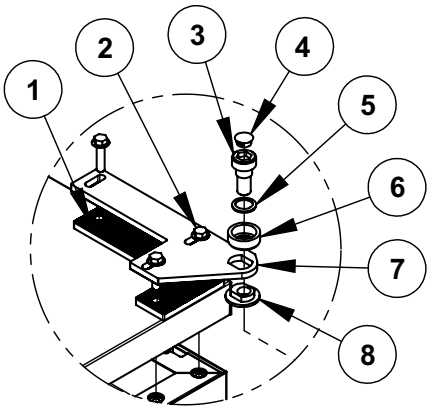

Item	Part	Description	Qty.
1	HG-28094	Hinge Ratchet, Part 2	1
2	SC-28891	Screw, Truss Head	3
3	SC-25102	Screw	1
4	PG-25132	Plug	1
5	WS-25478	Washer, Serrated	1
6	WS-25127	Covering Washer	1
7	HG-28296	Hinge Ratchet, Part 1	1
8	WS-25124	Block Washer	1

BOTTOM HINGE ASSEMBLY

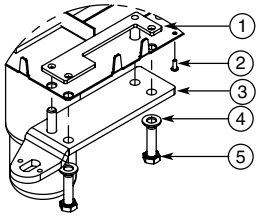

Right-Hand
6.10, 10.10, 7.14

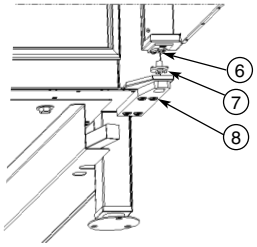

Right-Hand
10.20, 12.18, 20.20

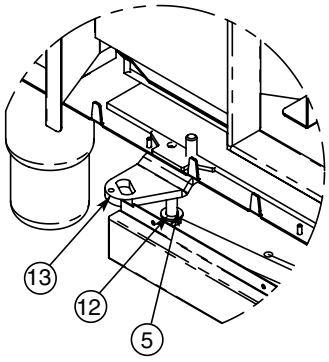

Left-Hand
6.10

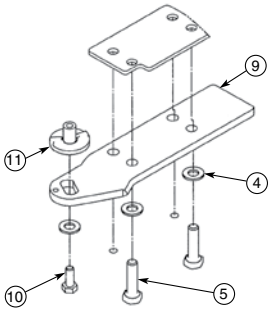

Left-Hand
10.10, 7.14

Item	Part	Description	Qty.
1	HG-27684	Door Mounting Plate	1
2	RI-27108	Sealed Rivet	1
3	HG-28525	Lower Plate	1
4	WS-22298	Washer, M8, 18-8	4
5	SC-22279	Hex Head Screw, M8 x 30	4
6	HG-25079	Lower Plate	1
7	HG-25101	Lower Hinge Ratchet	1
8	HG-28524	Lower Hinge, R-H	1
9	HG-28155	Lower Hinge, L-H	1
10	SC-22284	Hex Head Screw, M6 x 16	1
11	HG-25101	Lower Hinge Ratchet	1
12	WS-22323	Washer	1
13	HG-26299	Lower Hinge	1

PARTS INFORMATION

TOUCH CONTROL

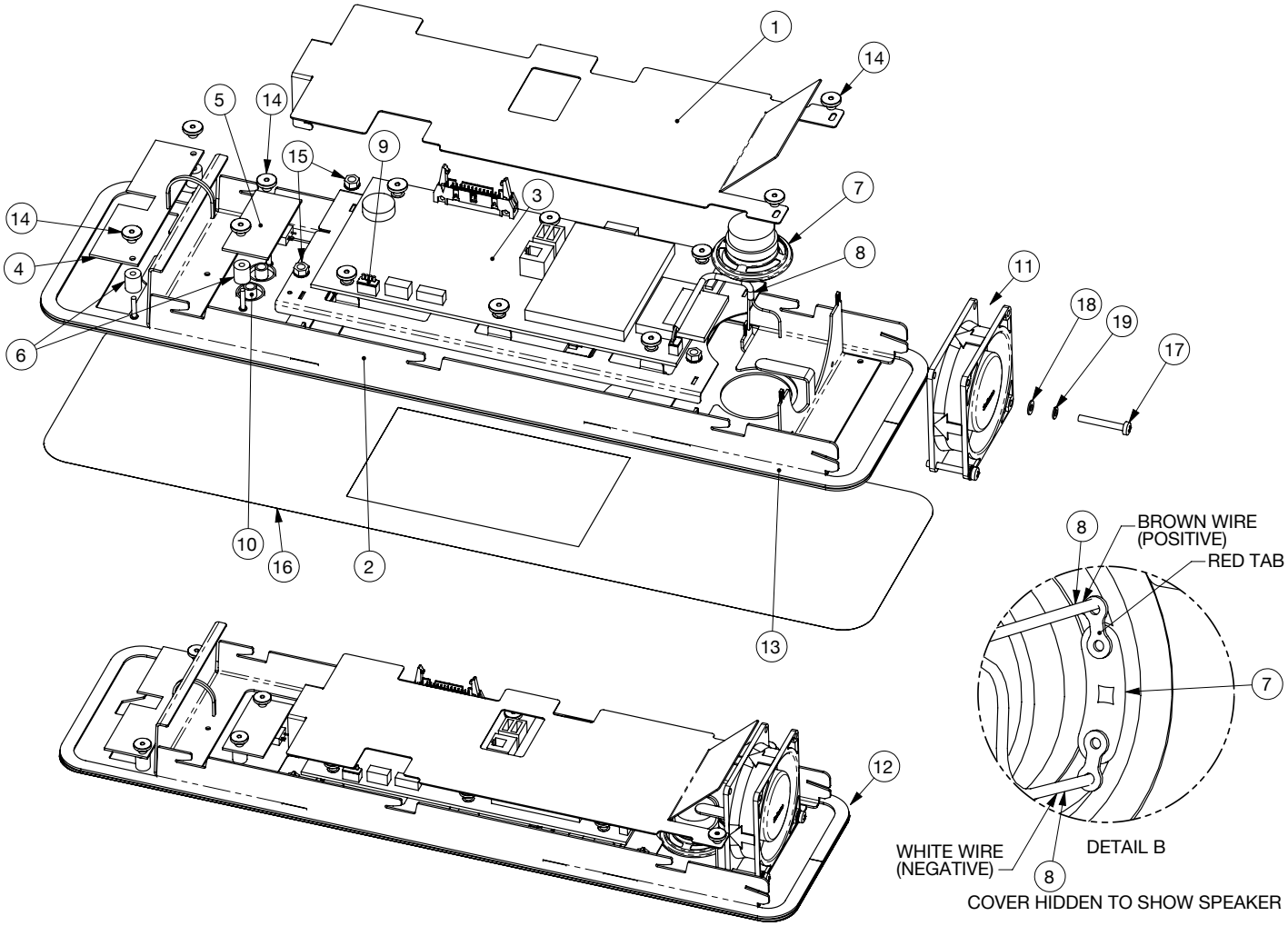

*NOT SHOWN

Item	Part	Control Panel Kit Description (5010483)	Qty.
1	1011341	Cover, Display Board	1
2	5010481	Frame, Control Panel	1
3	5010482	Touch Screen Display & Board	1
4	BA-33991	Board, Alto-Shaam Name	1
5	BA-34778	Board, ON/OFF, Touch Screen	1
6	BU-25094	Bushing, Brass Spacer	4
7	BZ-34675	Buzzer, Speaker, Rated 8 Ohm	1
8	CB-34914	Cable, Speaker Board, Touch Screen	1
9	CB-34917	Cable, ON/OFF Board, Touch Screen	1
10	CP-25405	Cap, Diameter 15mm x 8.5mm	1
11	FA-34918	Fan, Cooling, 115V	1
	FA-34919	Fan, Cooling, 230V	1

Item	Part	Control Panel Kit Description (5010483)	Qty.
12	5012792	CombiTouch Screen Control Assembly, 120V	
	5010483	CombiTouch Screen Control Assembly, 240V	1
13	GS-23622	Gasket, adhesive, 4.5'	1
14	NU-25095	Nut, Knurled M3	6
15	NU-27851	Nut, Hex 5mm with Star Washer	4
16	PE-29004	Panel Overlay, Touch Screen	1
17	SC-29276	Screw, M4	2
18	WS-22294	Washer, Flat M4	2
19	WS-22300	Washer, Split Lock M4	2
20*	CB-34033	Cable, Communication (counter-top models)	1
21*	SL-34493	Sleeve, for Communication Ribbon Cable	1
22*	CB-35024	Ferrite for Communication Ribbon Cable	2

TOUCH CONTROL

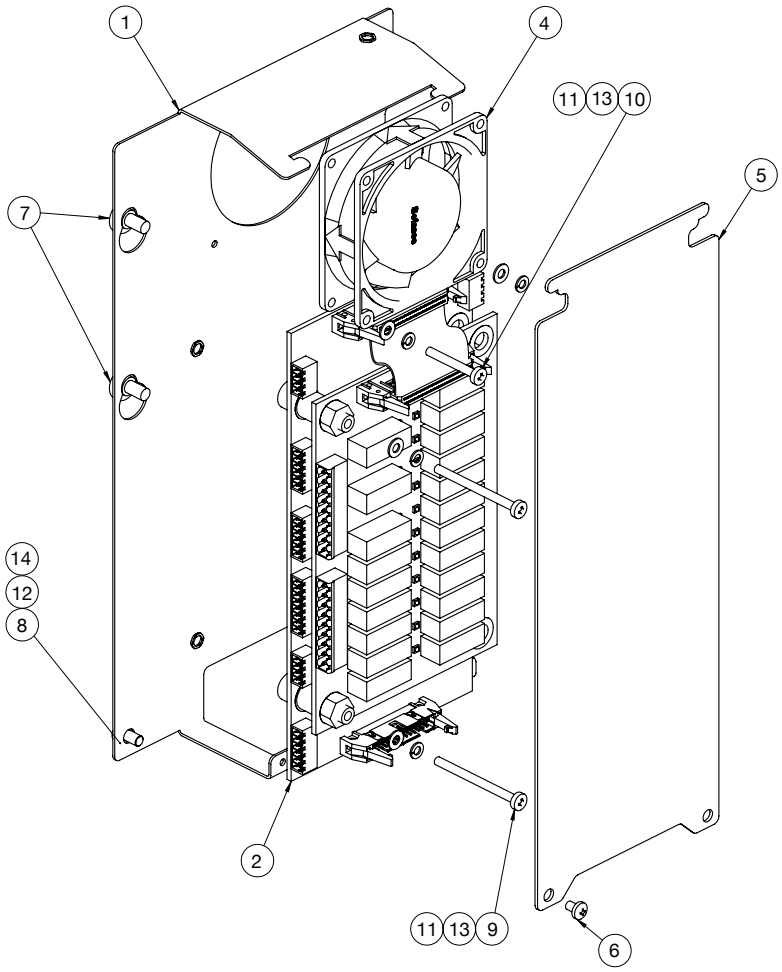

Item	Part	Control Panel Kit Description (5011831)	Qty.
1	5011995	Plate Assembly, Relay Board	1
2	BA-34670	Board, Touch Screen Relay	1
3	FA-34918	Fan, Cooling, 115V	1
4	FA-34919	Fan, Cooling, 230V (see arrow for #3)	1
5	GL-29267	Cover, Relay Board	1
6	SC-22271	Screw, Philips Head, M4	2
7	SC-22753	Screw, Round, Hanging Rack	2
8	SC-22766	Screw, Pan Head Philips	1
9	SC-29261	Screw, M4x50mm	4
10	SC-29276	Screw, M4x30mm	2
11	WS-22294	Washer, Flat M4	6
12	WS-22295	Washer, Flat M5	1
13	WS-22300	Washer, Split Lock M4	6
14	WS-22301	Washer, Split Lock M5	1

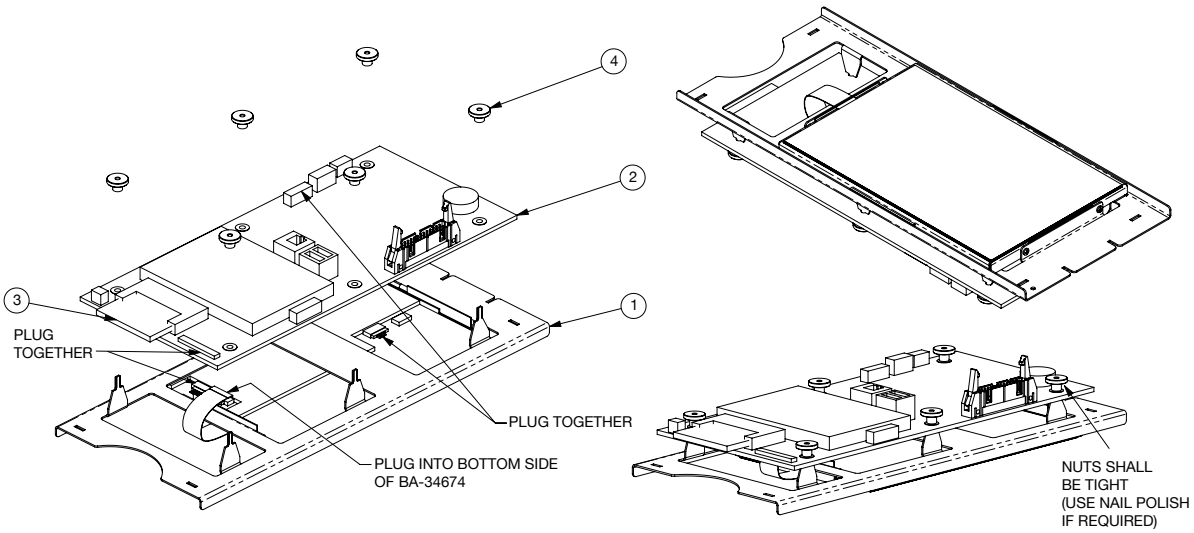

Item	Part	Control Panel Kit Description (5010482)	Qty.
1	5013093	CombiTouch Screen Display Assembly	1
2	BA-34674	Board, Single Board Computer	1
3	BA-34922	Board, Compact Flash, 2GB	1
4	NU-25095	Nut, Knurled M3	6

RIBBON CABLE ROUTING

6•10ESG
10•10ESG
7•14ESG

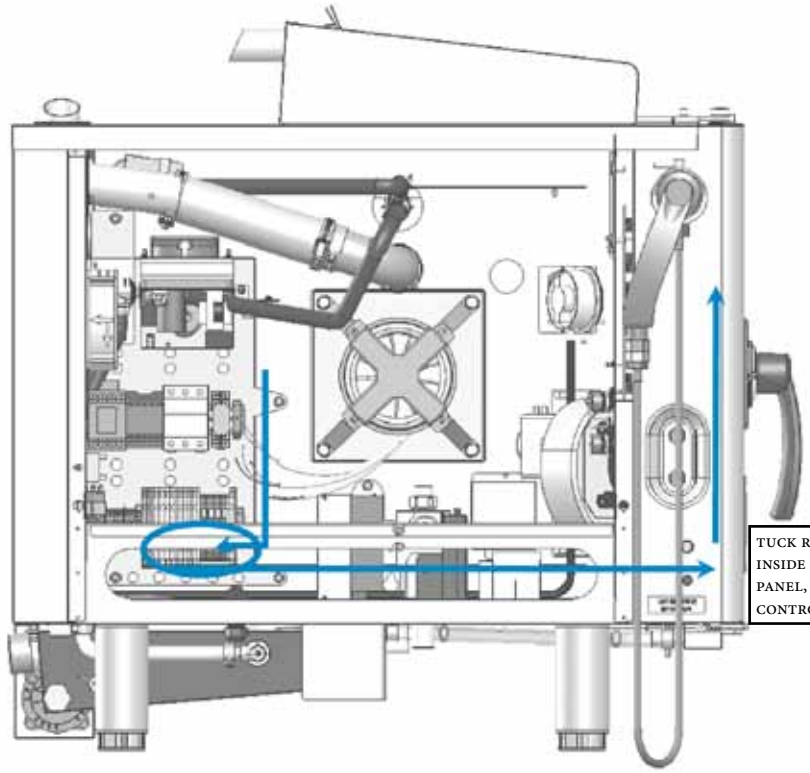

12•18ESG
10•20ESG

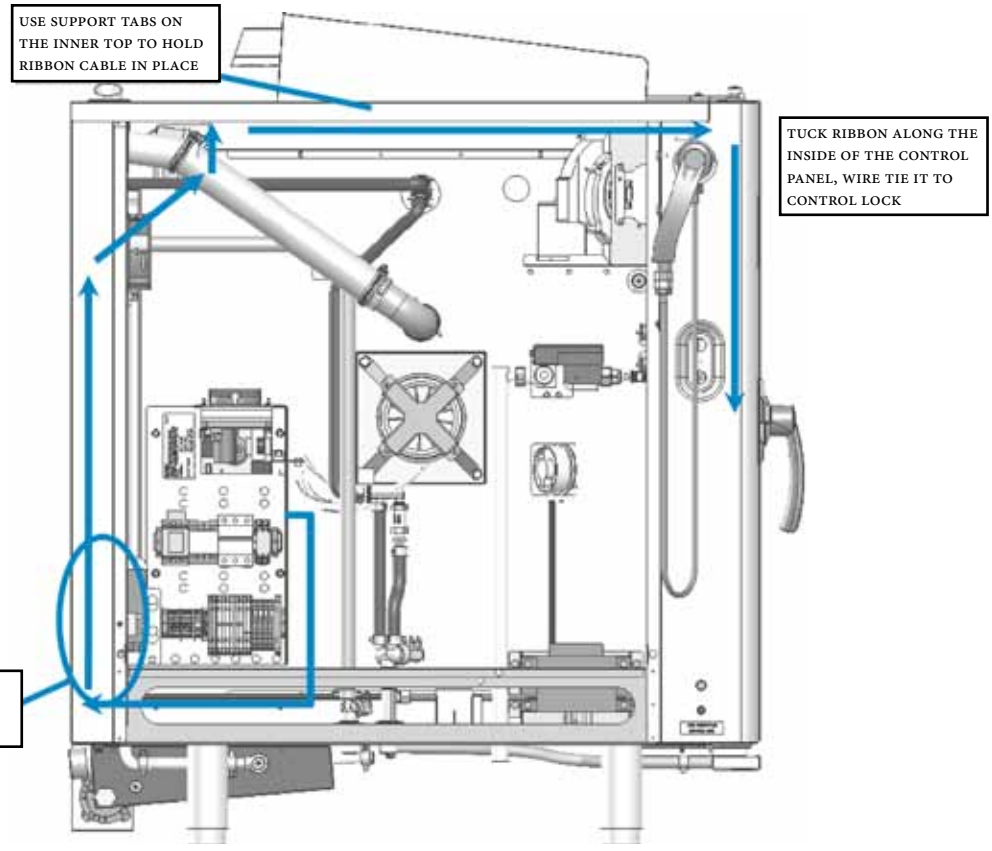

RIBBON CABLE ROUTING

20•20ESG

USE SUPPORT TABS ON THE INNER TOP TO HOLD RIBBON CABLE IN PLACE

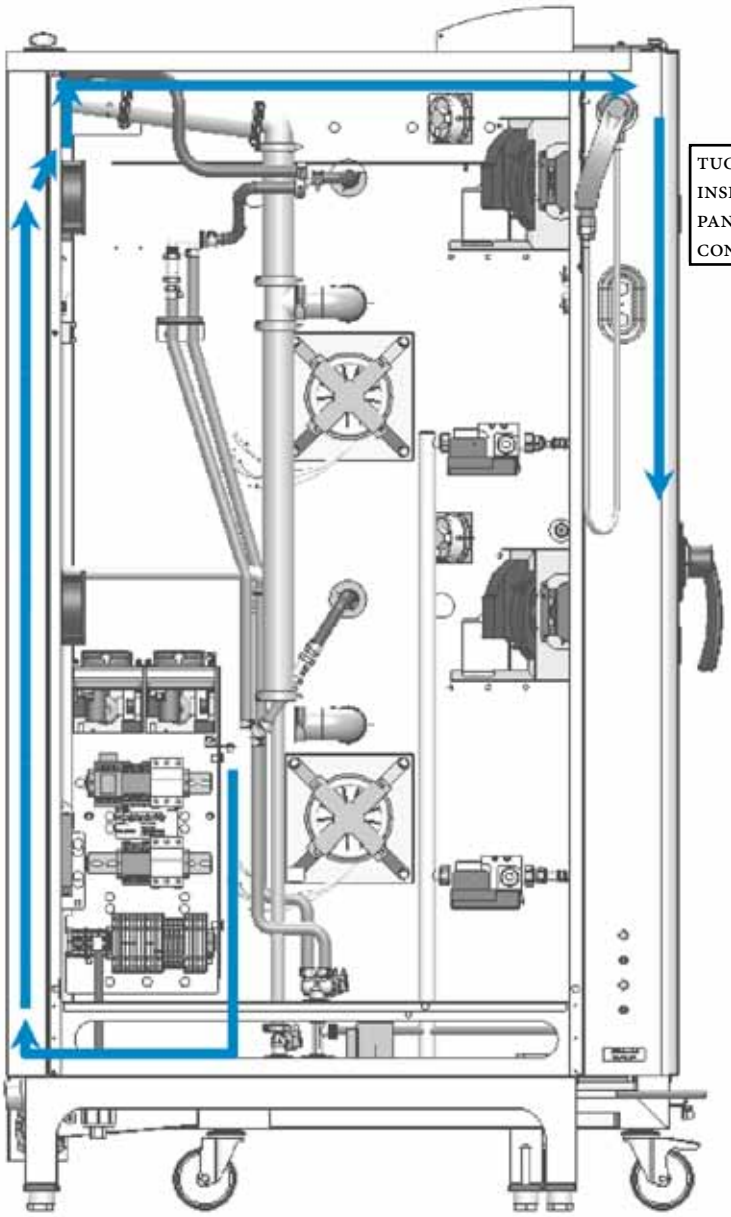

TUCK RIBBON ALONG THE INSIDE OF THE CONTROL PANEL, WIRE TIE IT TO CONTROL LOCK

COMBITHERM MOTOR

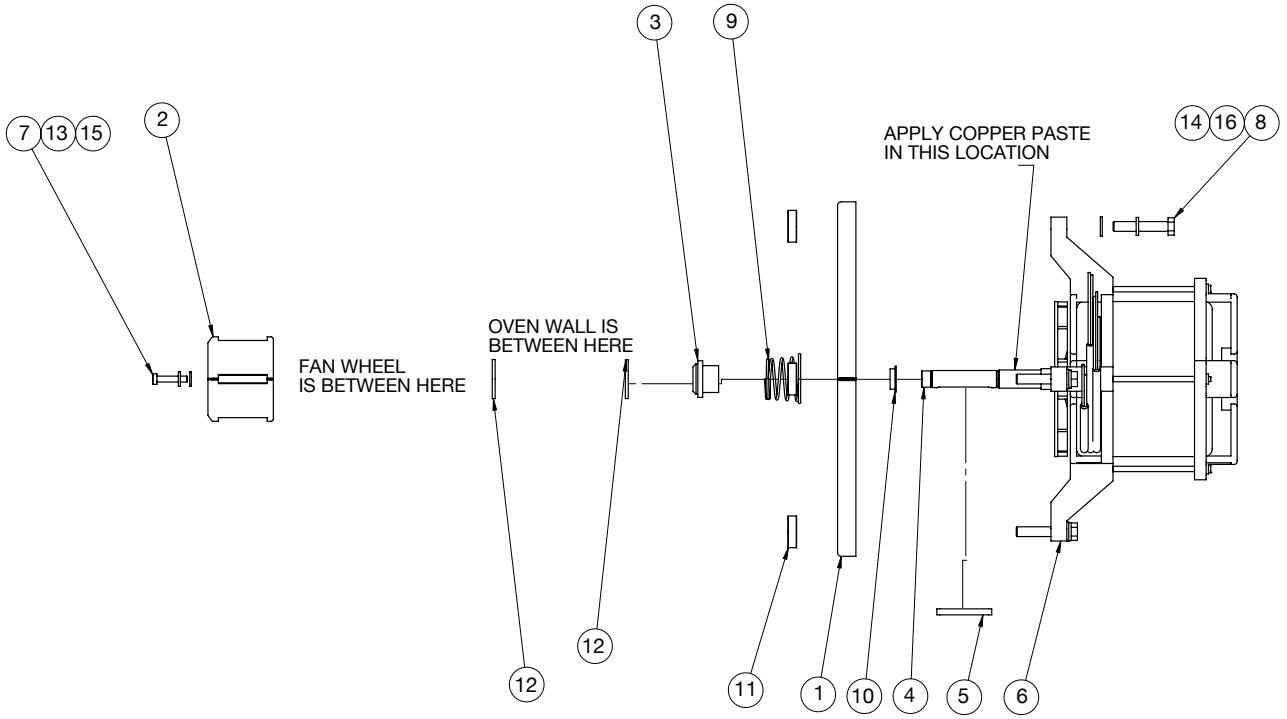

NOTE:
ASSEMBLY SEQUENCE: MOUNT THE FOLLOWING ITEMS TO THE MOTOR SHAFT IN THIS ORDER: PLACE MOTOR BAFFLE OVER SHAFT, MOUNT BRASS MOTOR SLEEVE USING MALLET PIPE, COAT BOTTOM PART OF SHAFT WITH COPPER PASTE. PLACE SPRING, THEN MOTOR SHAFT BUSHING, THEN SEALING WASHER, AND FINALLY PLACE KEY IN KEYWAY OF SHAFT.

Item	Part	Description (5012299)	Qty.
1	1000716	Motor Baffle	1
2	1001204	Disintegration Box	1
3	BU-22213	Bushing, 30D, Motor Shaft	1
4	BU-29363	Bushing, .525OD	1
5	MO-22191	Keyway, Motor	1
6	MO-34857	Motor, 208-240V	1
7	SC-29364	Screw, M5	1
8	SC-29523	Screw, M8	4

Item	Part	Description (5012299)	Qty.
9	SD-23939	Spring	1
10	SL-22214	Motor, Defle, Phosphor Bronze	1
11	SP-27895	Spacer, Motor	4
12	WS-22217	1.25 OD Washer	2
13	WS-22297	Washer, Flat, M6	1
14	WS-22298	Washer, M8	4
15	WS-22302	Washer, M6 Split Lock	1
16	WS-22303	Washer, M8 Split Lock	4

MOTOR PUMP ASSEMBLY

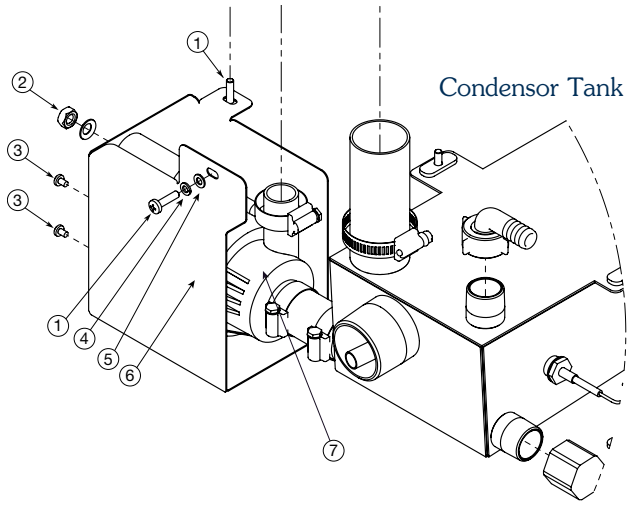

Item	Part	Description	Qty.
1	SC-22779	Screw	2
2	NU-2292	Nut	1
	WS-24396	Washer for Nut	1
3	SC-22273	Screw	2
	WS-22300	Washer (not shown)	2
	WS-22294	Washer (not shown)	2
4	WS-22301	Washer	2
5	WS-22295	Washer	2
6	1010151	Pump Housing	1
7	MO-34635	Motor, 120V	1
	MO-34636	Motor, 230V	1

SERVICE PARTS — 6•10ESG, 10•10ESG, 7•14ESG

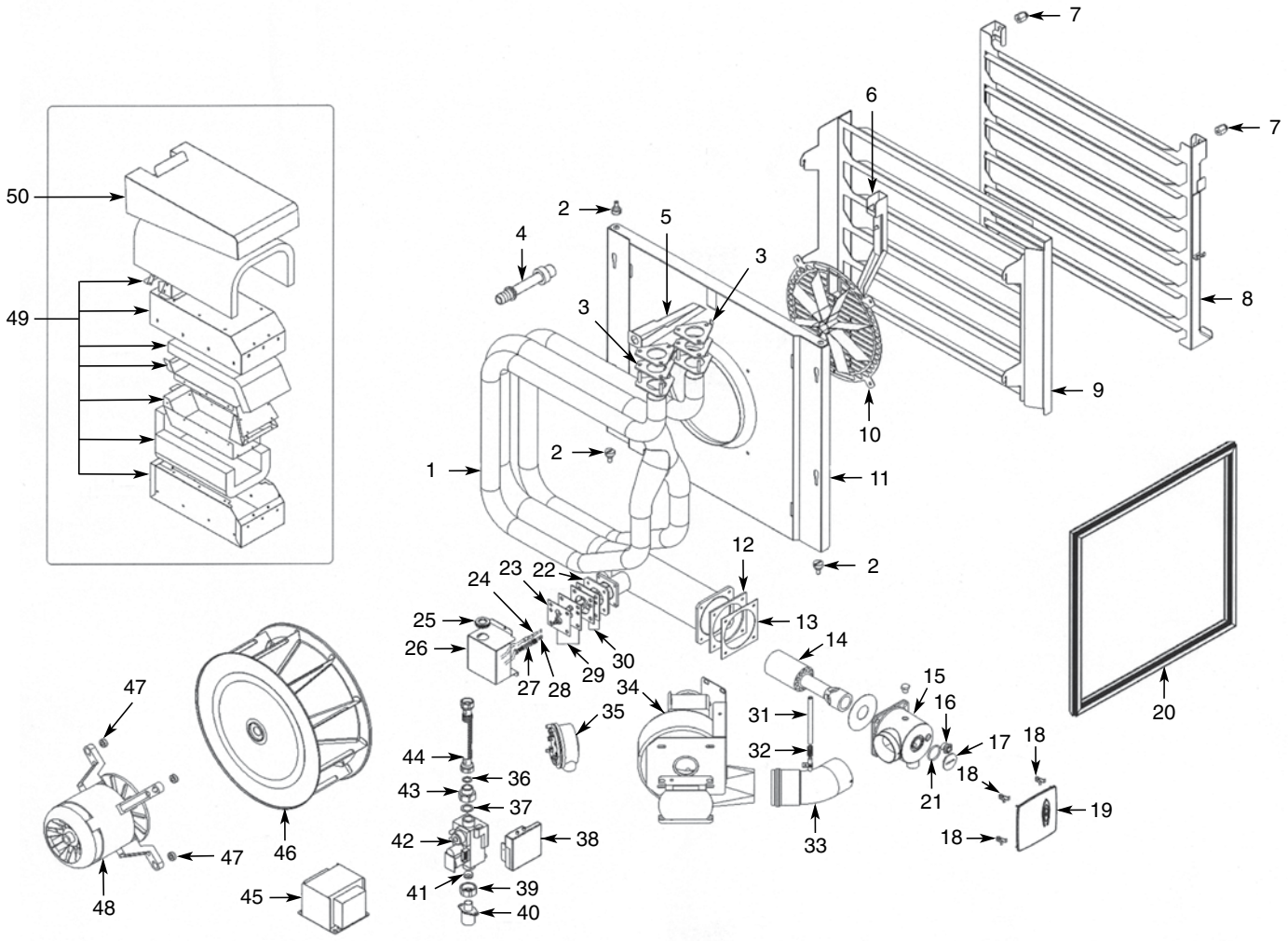

Item	Part	Description	Qty.
1	BN-27702	Heat Exchanger Complete, 6.10esG	1
	BN-27703	Heat Exchanger Complete, 10.10esG	1
	BN-27704	Heat Exchanger Complete, 7.14esG	1
2	SC-28774	Screw TE M6 x 20 CH14	4
3	5010494	Heat Exchanger Service Kit, 7.14ESG	1
	5010495	Heat Exchanger Service Kit, 6.10ESG, 10.10ESG	1
4	PB-27733	Water Injection Pipe	1
5	PB-27731	Water Injection Trove, 6.10ESG, 10.10ESG	1
	PB-27732	Water Injection Trove, 7.14ESG	1
6	PB-28782	Water Injection Tube for Direction Panel, 6.10ESG, 10.10ESG	1
	PB-27729	Water Injection Tube for Direction Panel, 7.14ESG	1
7	SP-28623	M6 Side Rack Stud, Bullet Style	2
	SC-22753	M6 Side Rack Stud Screw	2
8	SR-28992	Side Rack Right, 6.10ESG	1
	SR-28996	Side Rack Right, 10.10ESG	1
	SR-28994	Side Rack Right, 7.14ESG	1
9	SR-28991	Side Rack Left, 6.10ESG	1
	SR-28995	Side Rack Left, 10.10ESG	1
	SR-28993	Side Rack Left, 7.14ESG	1
10	CG-28762	Screen Grille, 6.10ESG	1
	GD-28780	Screen Grille, 10.10ESG	1
	CG-28799	Screen Grille, 7.14ESG	1

Item	Part	Description	Qty.
11	PE-27734	Direction Panel Complete, 6.10ESG	1
	PE-28771	Direction Panel Complete, 10.10ESG	1
	PE-27736	Direction Panel Complete, 7.14ESG	1
12	GS-28630	Interior Combustion Chamber Gasket	1
13	GS-28629	Exterior Combustion Chamber Gasket	1
14	BN-28775	Burner	1
15	BN-27710	Air-Gas Distributor	1
16	GL-27724	Burner Control Glass Complete	1
17	SC-29099	Injector Plug	1
18	CL-27105	Clip for Burner Cover	4
19	CV-27106	Cover for Burner Flame	1
20	GS-27129	Door Gasket, 6.10ESG	1
	GS-27128	Door Gasket, 10.10ESG	1
	GS-27130	Door Gasket, 7.14ESG	1
21	SA-28768	O-Ring Ø25.07	1
22	GS-28567	Ignition Plug Flange Gasket	1
23	FL-34702	Flange Ignitor	1
24	WI-34696	Sensing Wire, Flame	1
25	SA-29100	Grommet Ø48 Ø60	1
26	PE-29101	Shield	1
27	SL-34824	Insulating Sleeve	1

[continued on next page]

[continued from previous page]

Item	Part	Description	Qty.
28	CB-34699	Cable “HF” 400mm	1
29	IG-34694	Igniter	1
30	SP-34703	Ignition Plug Spacer	2
31	PP-28798	Air Pipe Ø8 x Ø5	1
32	FT-29104	Pressure Test Point Pipe	1
33	PP-28761	Air Pipe	1
34	FA-34396	Burner Blower Fan 80 Watt Assembly	1
35	SW-34399	Air Pressure Switch	1
36	WS-28765	Washer 1/2"	2
37	WS-28764	Washer 3/4"	1
38	BA-34397	Gas Valve Control Ignition Module	1
39	NU-28797	Ogival Retainer Union 3/4 Ø16, 6.10ESG, 10.10ESG	1
	NP-28800	Ogival Retainer Union 3/4 Ø16, 7.14ESG	1
40	FT-29105	Intake Union, Gas R3/4 NPT, 6.10ESG, 10.10ESG	1
	NP-28801	Intake Union, Gas R3/4 NPT, 7.14ESG	
41	WS-28796	Ogival Gasket Ø16 Ø18.5 x 8	1
42	VA-34398	Valve Honeywell	1
43	NP-28800	Sleeve F3/4 M1/2	1
44	PP-28804	Burner Pipe	1
45	TN-34640	Step Up Transformer	1
46	WH-27752	Fan Wheel Diameter 285mm, 6.10ESG, 10.10ESG	1
	WH-27751	Fan Wheel Diameter 340mm, 7.14ESG	1
47	SP-27895	Motor Spacer	4
48	5008295	Motor 0.37 kW 110 V 60 HZ	1

**Item Not Shown

Item	Part	Description	Qty.
49	BN-27707	Burner Flue Complete, 6.10ESG, 10.10ESG	1
	BN-27708	Burner Flue Complete, 7.14ESG	1
50	CV-28767	Flue Cover, 6.10ESG, 10.10ESG	1
	PE-27740	Flue Cover, 7.14ESG	1
**	DA-27532	Drain, Black Elbow with Fitting	1
**	SA-29116	Siphon Gasket	1
**	NZ-28184	Nozzle, Natural Gas, 6.10ESG, Size 365	1
**	NZ-28181	Nozzle, Propane Gas, 6.10ESG, Size 240	1
**	NZ-28185	Nozzle, Natural Gas, 10.10ESG, Size 450	1
**	NZ-28182	Nozzle, Propane Gas, 10.10ESG, Size 290	1
**	NZ-27725	Nozzle, Natural Gas, 7.14ESG, Size 510	1
**	NZ-27726	Nozzle, Propane Gas, 7.14ESG, Size 325	1
**	LG-29375	Legs	4
**	FT-29080	Legs, Seismic (option)	4
**	PR-33746	Probe, Mulitple Point	
**	PR-34299	Probe Receptacle, Removable	
**	PR-34298	Probe, Single Point, Removable	
**	PR-34747	Probe, Sous Vide	
**	SH-2903	Shelves, 6.10ESG, 10.10ESG	
**	SH-22584	Shelves, 7.14ESG, 12.18ESG, 10.20ESG, 20.20ESG	

SERVICE PARTS — 12•18ESG, 10•20ESG

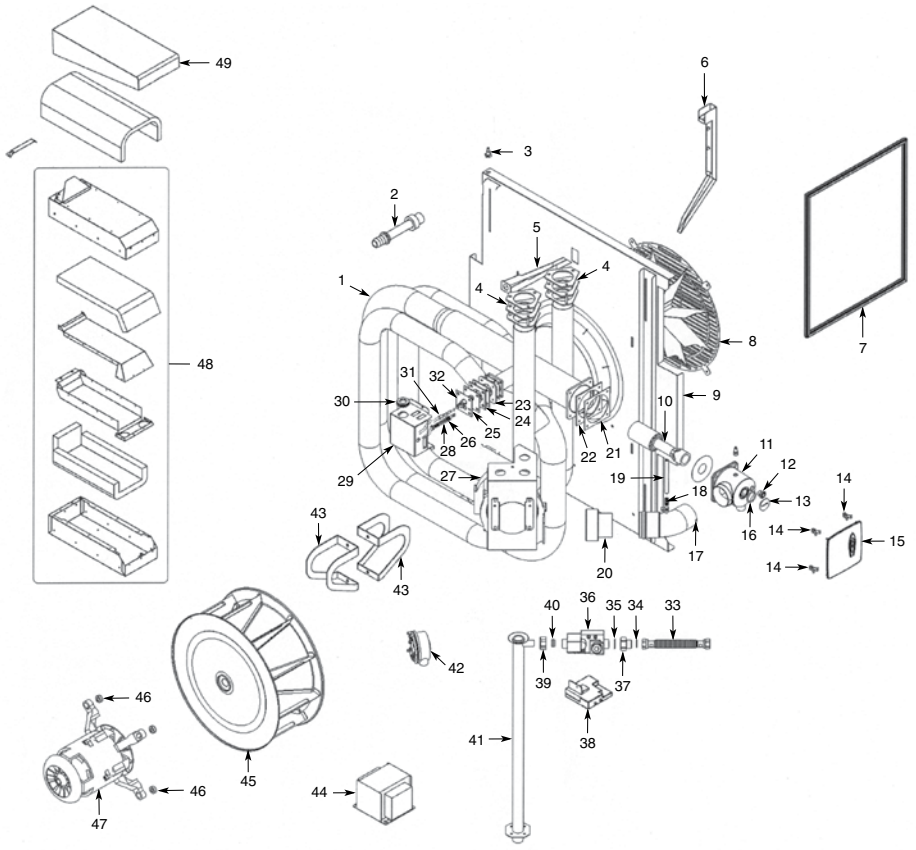

**Item Not Shown

Item	Part	Description	Qty.
1	BN-22705	Heat Exchanger Complete	1
2	PB-27733	Water Injection Pipe	1
3	SC-28774	Screw TE M6 x 20 CH14	4
4	SA-29093	Outlet Flange Gasket	4
5	PB-27732	Water Injection Trove	1
6	PB-27730	Water Injection Tube for Direction Panel	1
7	GS-27127	Door Gasket, 12.18ESG, 10.20ESG	1
8	CG-28791	Screen Grille	1
9	PE-27739	Direction Panel Complete 12.18ESG, 10.20ESG	1
10	BN-29098	Burner	1
11	BN-28776	Air-Gas Distributor	1
12	GL-27724	Burner Control Glass Complete	1
13	SC-29099	Injector Plug	1
14	CL-27105	Clip for Burner Cover	4
15	CV-27106	Cover for Burner Flame	1
16	SA-28788	O-Ring Ø25.07	1
17	PP-28761	Air Pipe	1
18	FT-29104	Pressure Test Point Pipe	1
19	PP-28798	Air Pipe Ø8 x Ø5	1
20	RR-28787	Fan Manifold	1
21	GS-28630	Combustion Chamber Gasket, Interior	1
22	GS-28629	Combustion Chamber Gasket, Exterior	1
23	GS-28567	Ignition Plug Flange Gasket	1
24	SP-34703	Ignition Plug Spacer	2
25	IG-34695	Igniter	1
26	CB-34699	Spark Cable “HF” 400mm	1
27	FA-34395	Burner Blower Watt Assembly, 54 Watt	1
28	SL-34824	Insulating Sleeve	1
29	PE-29102	Shield	1
30	SA-29100	Grommet Ø48 Ø60	1
31	WI-34696	Sensing Wire	1
32	FL-34702	Flange	1

Item	Part	Description	Qty.
33	PP-28804	Burner Pipe	1
34	WS-28765	Washer 1/2"	2
35	WS-28764	Washer 3/4"	1
36	VA-34398	Valve Honeywell	1
37	NP-28800	Sleeve F3/4 M1/2	1
38	BA-34397	Gas Valve Control Ignitional Module	1
39	NP-28800	Ogival Retainer Union 3/4 Ø16	1
40	WS-28796	Ogival Gasket Ø16 Ø18.5 x 8	1
41	NP-28803	Gas Manifold Assembly Y 3/4 NPT	1
42	SW-34399	Air Pressure Switch	1
43	BT-28794	Exchanger Bracket	2
44	TN-34640	Step Up Transformer	1
45	WH-27751	Fan Wheel Diameter 365mm	1
46	SP-27895	Motor Spacer	4
47	5008294	Motor 0.37 kW 110V 60 HZ	1
48	BN-27708	Burner Flue Complete	1
49	PE-27740	Flue Cover	1
**	BN-27714	Flue Exhaust Pipe	1
**	DA-27532	Drain Fitting ES/ESG	1
**	NZ-28187	Nozzle, Natural Gas, Size 565	1
**	NZ-28184	Nozzle, Propane Gas, Size 365	1
**	WS-29112	Washer, Diaphragm for Burner	1
**	SR-27984	Side Rack Assembly, 12.18ESG	1
**	LG-29375	Legs, 12.18ESG	4
**	FT-29080	Legs, Seismic, 12.18ESG (option)	4
**	PR-33746	Probe, Mulitple Point	
**	PR-34299	Probe Receptacle, Removable	
**	PR-34298	Probe, Single Point, Removable	
**	PR-34747	Probe, Sous Vide	
**	SH-22584	Shelves, 12.18ESG, 10.20ESG	

PARTS INFORMATION

SERVICE PARTS — 20•20ESG (PARALLEL VALVE)

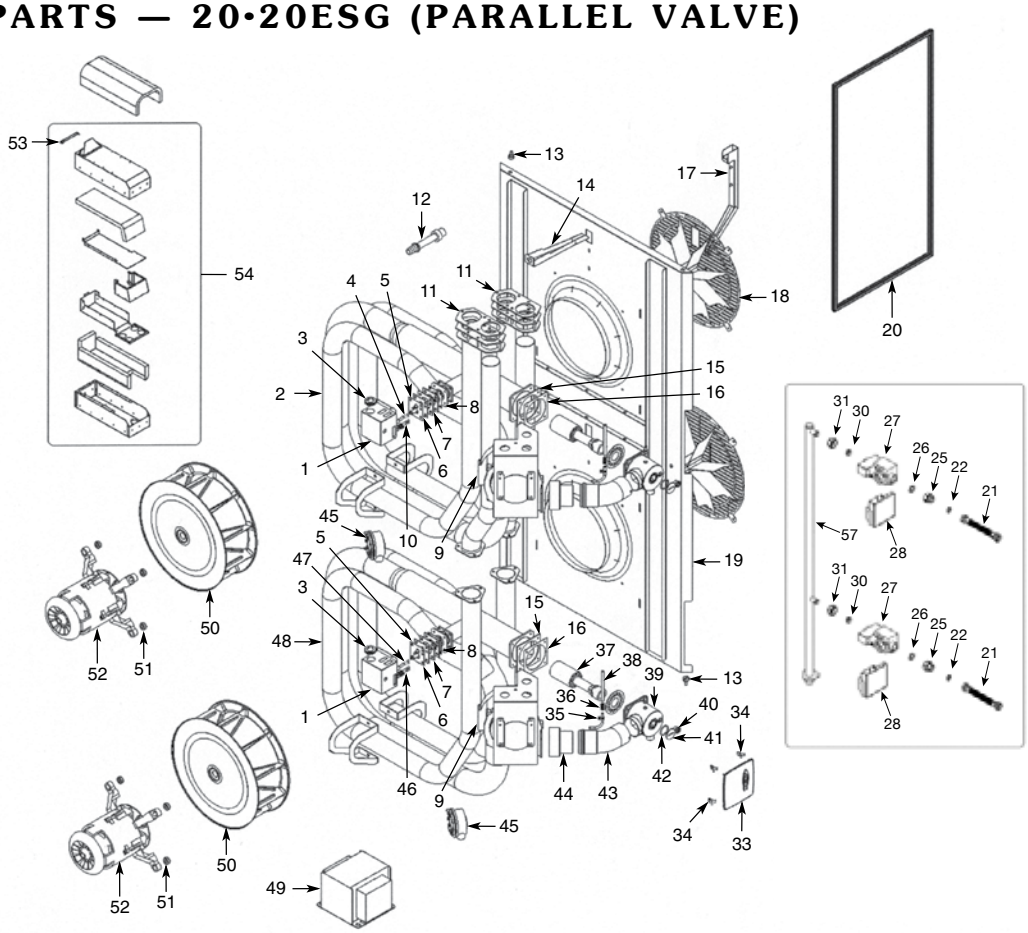

**Item Not Shown

Item	Part	Description	Qty.
1	PE-29102	Shield	2
2	BN-28815	Heat Exchanger Complete	1
3	SA-29100	Grommet Ø48 Ø60	2
4	WI-34697	Flame Sense Ionization Cable 1400mm	1
5	FL-34702	Flange	2
6	IG-34695	Igniter	2
7	SP-34703	Ignition Plug Spacer	4
8	GS-28567	Ignition Plug Flange Gasket	2
9	FA-34395	Burner Blower Fan 80 Watt Assembly	2
10	WI-34700	Spark Cable "HF" 1300mm	1
11	SA-29094	Outlet Flange Gasket	4
12	PB-27733	Water Injection Pipe	2
13	SC-28774	Screw TE M6 x 20 CH14	4
14	PB-27730	Water Injection Trove	2
15	SA-28770	Combustion Chamber Gasket	2
16	SA-28769	Combustion Chamber Gasket	2
17	PB-27730	Water Injection Tube For Direction Panel	2
18	CG-28791	Screen Grille	2
19	PE-28816	Direction Panel Complete 20.20ESG	1
20	GS-27126	Door Gasket 20.20ESG	1
21	PB-28804	Burner Pipe, Parallel Gas Valve	2
22	WS-28765	Washer 1/2"	2
23**	FT-28818	T Joint 1/2" F-F-M.	1
24**	NP-28817	Nipple M 1/2"	1
25	NP-28800	Sleeve F3/4 M1/2	3
26	WS-28764	Washer 3/4"	3
27	VA-34398	Valve Honeywell	2
28	BA-34397	Gas Valve Control	1
29**	FT-28819	Union FF 1/2"	1
30	WS-28796	Ogival Gasket Ø16 Ø18.5 x 8	1
31	NP-28800	Ogival Retainer Union 3/4 Ø16	1
32**	FT-29105	Intake Union, Gas R3/4 NPT	1

Item	Part	Description	Qty.
33	CV-27106	Cover for Burner Flame	2
34	CL-27105	Clip for Burner Cover	8
35	FT-29104	Pressure Test Point Pipe	2
36	FT-29104	Pressure Test Point Pipe	2
37	BN-28775	Burner	2
38	PP-28798	Air Pipe Ø8 x Ø5	2
39	BN-28776	Air-Gas Distributor	2
40	GL-27724	Burner Control Glass Complete	2
41	SC-29099	Injector Plug	2
42	SA-28768	O-Ring Ø25.07	2
43	PP-28761	Air Pipe	2
44	RR-28787	Fan Manifold	2
45	SW-34399	Air Pressure Switch	2
46	WI-34701	Spark	1
47	WI-34698	Flame Sensor	1
48	BN-28795	Heat Exchanger Complete	1
49	TN-34640	Step Up Transformer	2
50	WH-27751	Fan Wheel Diameter 340mm	2
51	SP-27895	Motor Spacer	8
52	5008294	Motor 0.50 kW 115V-120V 60 HZ	2
53	BN-29108	Flue Exhaust Pipe Complete	1
54	BN-29106	Burner Flue Complete, Parallel Gas Valve	1
57	TU-29566	Gas Manifold, 3/4" Parallel	1
**	DA-27532	Drain Fitting	1
**	SA-29116	Siphon Gasket	1
**	NZ-28186	Nozzle, Natural Gas, Size 550	2
**	NZ-28183	Nozzle, Propane Gas, Size 335	2
**	PR-33746	Probe, Mulitple Point	
**	PR-34299	Probe Receptacle, Removable	
**	PR-34298	Probe, Single Point, Removable	
**	PR-34747	Probe, Sous Vide	
**	SH-22584	Shelves, 20.20ESG	

RIGHT-HAND DOOR ASSEMBLY (DUAL LATCH) — 6.10ESG, 10.10ESG, 7.14ESG, 12.18ESG

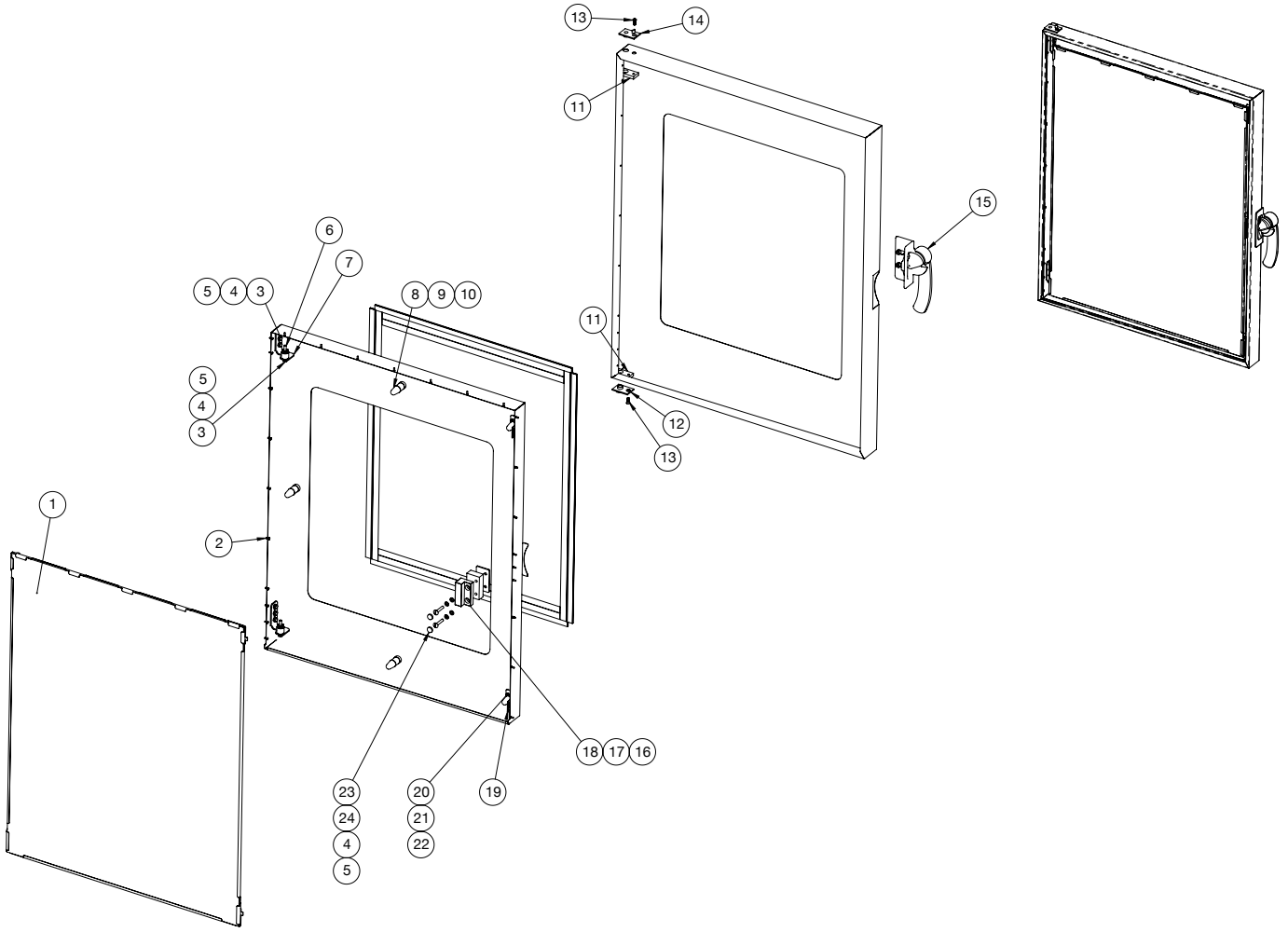

**Item Not Shown

Item	Part	Description	Qty.
–	DR-27715	Complete Right-hand Door Assembly, 6.10ESG	1
–	DR-27716	Complete Right-hand Door Assembly, 10.10ESG	1
–	DR-27717	Complete Right-hand Door Assembly, 7.14ESG	1
–	5007182	Complete Right-hand Door Assembly, 12.18ESG	1
1	5013324	Inner Door, Glass Assembly, 6.10ESG	1
	5012651	Inner Door, Glass Assembly, 10.10ESG	1
	5012653	Inner Door, Glass Assembly, 7.14ESG	1
	5012405	Inner Door, Glass Assembly, 12.18ESG	1
2	RI-27108	Rivet, Sealed	44
3	SC-22284	Screw, M6 x 16 Hex Stainless Steel Heavy-Duty	8
4	WS-22302	Washer, Split Lock	10
5	WS-22297	Washer, Flat, M6, DIN 125	10
6	PI-26974	Pin, Lower	2
7	1007893	Hinge, Lower Glass Holder	2
8	BM-25072	Bumper Stop/Inner Door	5
9	SP-27657	Spacer, Glass, 20mm	5
10	SC-25091	Screw, Slotted Set Screw Flat Point	5
11	HG-25078	Hinge, Anchor	2

Item	Part	Description	Qty.
12	HG-25079	Hinge, Upper Ratchet	1
13	SC-22282	Screw, Phillips Head Oval Heavy-Duty	2
14	HG-25077	Hinge, Top Stop	1
15	HD-26966	Handle, Door, Right	1
16	1009380	Spacer	1
17	SP-27682	Spacer, Inner Glass Latch	1
18	SP-27212	Spacer, Window Latch	1
19	LT-34777	Latch, Inner Door	2
20	SC-22271	Screws, Philips	2
21	WS-22300	Washer, Split Lock	2
22	WS-22294	Washer, Flat M4 Stainless Steel	2
23	PG-24789	Plug, 15mm	2
24	SC-29089	Screw, Truss Head	2
**	GS-27129	Door Gasket, 6.10ESG	1
**	GS-27128	Door Gasket, 10.10ESG	1
**	GS-27130	Door Gasket, 7.14ESG	1
**	GS-27127	Door Gasket, 12.18ESG	1

PARTS INFORMATION

RIGHT-HAND DOOR ASSEMBLY (DUAL LATCH) — 10.20ESG, 20.20ESG

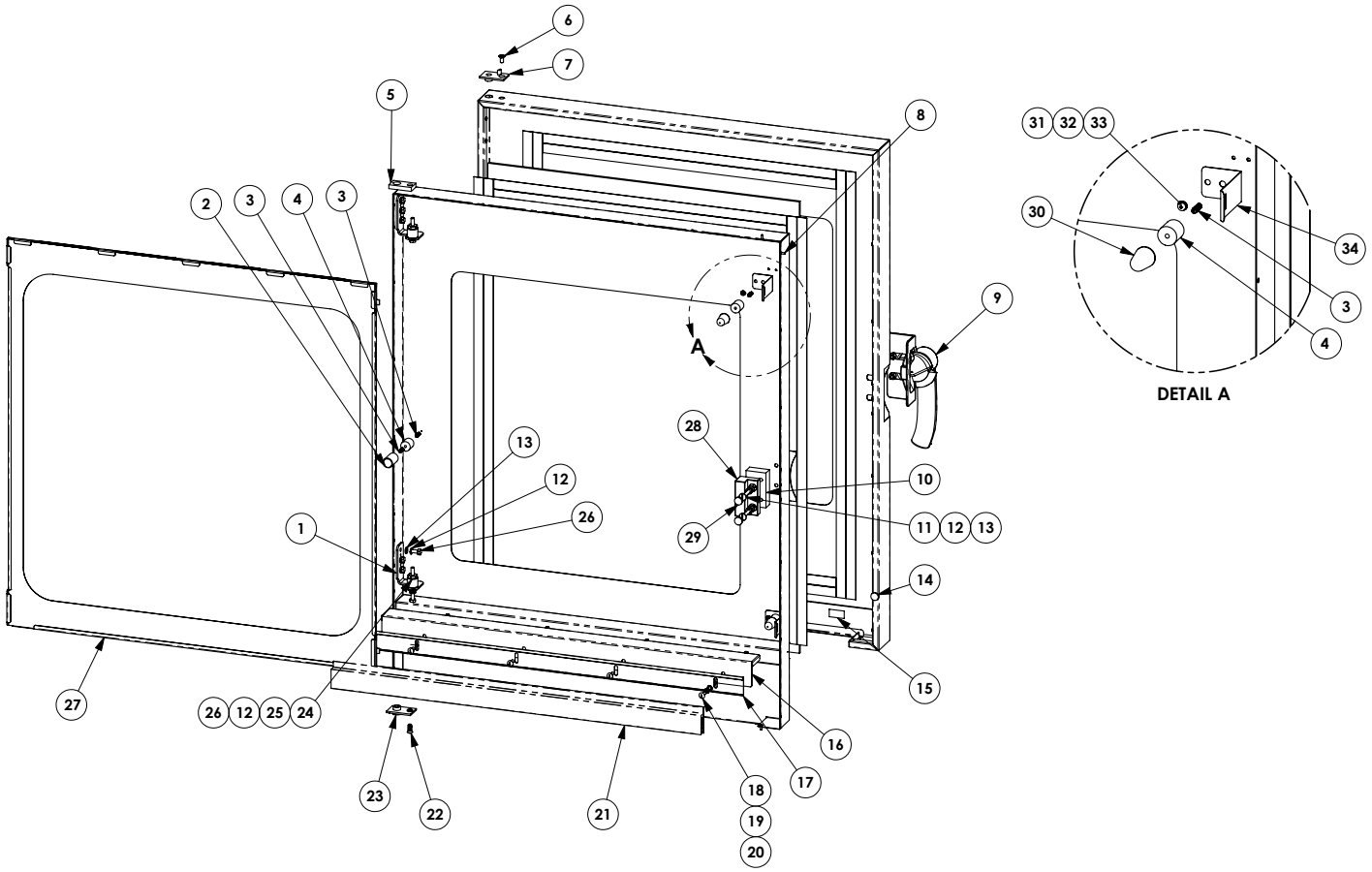

**Item Not Shown

Item	Part	Description	Qty.
–	5007179	Complete Door Assembly, 10.20ESG	1
–	5007973	Complete Door Assembly, 20.20ESG	1
1	1007893	Hinge, Lower Glass Holder	2
2	BM-27146	Bumper Stop/Inner Door	1
3	SC-25091	Screw, Slotted Set Screw Flat Point	4
4	SP-27657	Spacer, Glass, 20mm	3
5	HG-25078	Hinge, Anchor	2
6	SC-25085	Screw, M6 x 12, Oval Heavy-Duty	1
7	HG-25077	Hinge, Top Stop	1
8	RI-27108	Rivet, Sealed	34
9	HD-26966	Handle, Door, Right	1
10	SP-27682	Spacer, Inner Glass Latch	1
11	SC-29089	Screw, Truss Head	2
12	WS-22302	Washer, Split Lock	10
13	WS-22297	Washer, Flat, M6, DIN 125	8
14	SC-22753	Screws, Round, Hanging Rack	2
15	BM-27116	Bumper	4
16	1010070	Backer Support Sweep Gasket	1
17	1010294	Sweep Gasket Holder	1
18	SC-27109	Screw, Truss Head	4
19	WS-22301	Washer, M5 Split Lock Stainless Steel 18-8 DIN 127B	4
20	WS-22295	Washer, Flat M5 Stainless Steel	4

Item	Part	Description	Qty.
21	GS-28593	Door Gasket	1
22	SC-22282	Screw, Phillips Head Oval Heavy-Duty	1
23	HG-25079	Hinge, Upper Ratchet	1
24	PI-26974	Pin, Lower	2
25	WS-22094	Washer, Flat	2
26	SC-22284	Screw, M6 x 16 Hex Stainless Steel Heavy-Duty	8
27	5012128	Inner Door, Glass Assembly, 10.20ESG	1
	5012172	Inner Door, Glass Assembly, 20.20ESG	1
28	SP-27212	Spacer, Window Latch	1
29	PG-24789	Plug, 15mm	2
30	BM-25072	Bumper, Rubber	2
31	WS-22300	Washer, Split Lock	2
32	WS-22294	Washer, Flat	2
33	SC-22271	Screws, Philips	2
34	LT-34777	Latch, Inner Door	2
**	GS-27127	Door Gasket, 10.20ESG	1
**	GS-27126	Door Gasket, 20.20ESG	1
**	1010739	Preheat Sealing Strip (to preheat units without roll-in trolley)	1

LEFT-HAND DOOR ASSEMBLY (SINGLE LATCH) — 6.10ESG, 10.10ESG, 7.14ESG

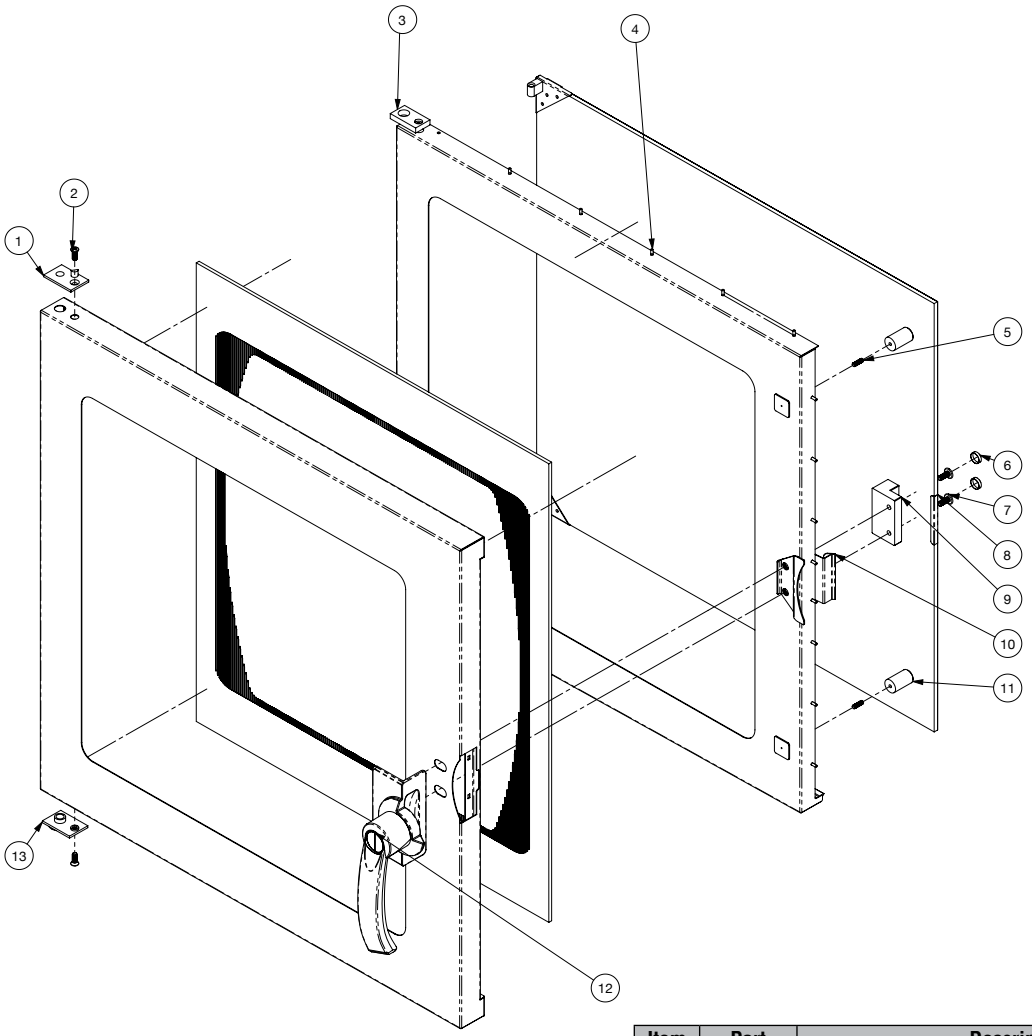

**Item Not Shown

Item	Part	Description	Qty.
–	5008169	Complete Left-Hand Door Assembly, 6.10ESG	1
–	5008234	Complete Left-Hand Door Assembly, 10.10ESG	1
–	5007424	Complete Left-Hand Door Assembly, 7.14ESG	1
1	HG-25077	Hinge, Top Stop	1
2	PI-26973	Pin, Upper	1
3	HG-25078	Hinge, Anchor	2
4	RI-27108	Rivet, Sealed	21
5	SC-25091	Screw, Slotted Set Screw Flat Point	2
6	PG-24789	Plug, 15mm	2
7	SC-27125	Screw, Truss Head	2
8	5018173	Inner Door, Glass Assembly, 6.10ESG	1
	5018237	Inner Door, Glass Assembly, 10.10ESG	1
	5007428	Inner Door, Glass Assembly, 7.14ESG	1
9	SP-27212	Spacer, Window Latch	1
10	1008564	Latch, Inner Door	1
11	BM-27146	Bumper	2
12	HD-26967	Handle, Door, Left	1
13	HG-25079	Hinge, Upper Ratchet	1
14	PI-26974	Pin, Lower (not shown)	1
15	BM-27116	Bumper (not shown)	2
**	GS-27129	Door Gasket, 6.10ESG	1
**	GS-27128	Door Gasket, 10.10ESG	1
**	GS-27130	Door Gasket, 7.14ESG	1

PARTS INFORMATION

RECESSED DOOR ASSEMBLY – (DUAL LATCH) — 6.10ESG, 10.10ESG, 7.14ESG, 12.18ESG

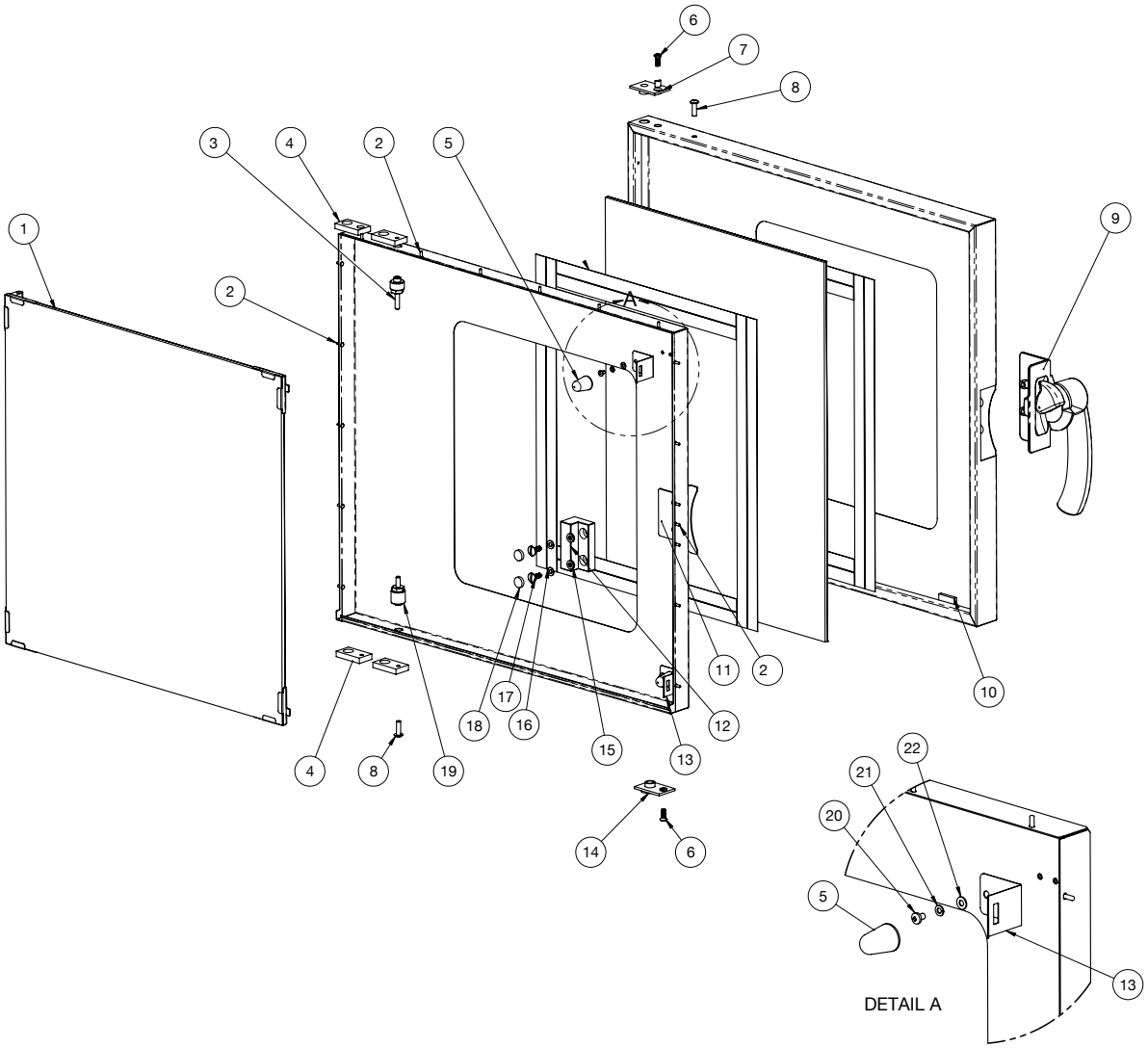

**Item Not Shown

Item	Part	Description	Qty.
–	5009777	Complete Right-hand Door Assembly, 6.10ESG	1
–	5009163	Complete Right-hand Door Assembly, 10.10ESG	1
–	5009775	Complete Right-hand Door Assembly, 7.14ESG	1
–	5011957	Complete Right-hand Door Assembly, 12.18ESG	1
1	5012652	Inner Door, Glass Assembly, 6.10ESG	1
	5012651	Inner Door, Glass Assembly, 10.10ESG	1
	5012653	Inner Door, Glass Assembly, 7.14ESG	1
	5012405	Inner Door, Glass Assembly, 12.18ESG	1
2	RI-27108	Rivet, Sealed	various
3	PI-26973	Pin, Upper	2
4	HG-25078	Hinge, Anchor	2
5	BM-25072	Bumper Stop/Inner Door	2
6	SC-22282	Screw, Phillips Head Oval Heavy-Duty	2
7	HG-25077	Hinge, Top Stop	1
8	SC-25128	Screw, Truss Head	2
9	HD-26966	Handle, Door, Right	1
10	BM-27116	Bumper	2

Item	Part	Description	Qty.
11	1009381	Spacer, 14 gauge, 6.10ESG, 10.10ESG	1
	1009380	Spacer, 11 gauge, 7.14ESG	1
12	SP-27212	Spacer, Window Latch	1
13	LT-29086	Latch, Inner Door Glass	2
14	HG-25079	Hinge, Upper Ratchet	1
15	WS-22297	Washer, Flat, M6, DIN 125	4
16	WS-22302	Washer, Split Lock	2
17	SC-27125	Screws, Truss Head	2
18	PG-24789	Plug, 15mm	2
19	PI-26974	Pin, Lower	1
20	SC-22271	Screws, Philips Head	2
21	WS-22300	Washer, Split Lock	2
22	WS-22294	Washer, Flat M4 Stainless Steel	2
**	GS-27129	Door Gasket, 6.10ESG	1
**	GS-27128	Door Gasket, 10.10ESG	1
**	GS-27130	Door Gasket, 7.14ESG	1
**	GS-27127	Door Gasket, 12.18ESG	1

RECESSED DOOR TRACK — 6.10ESG, 10.10ESG, 7.14ESG

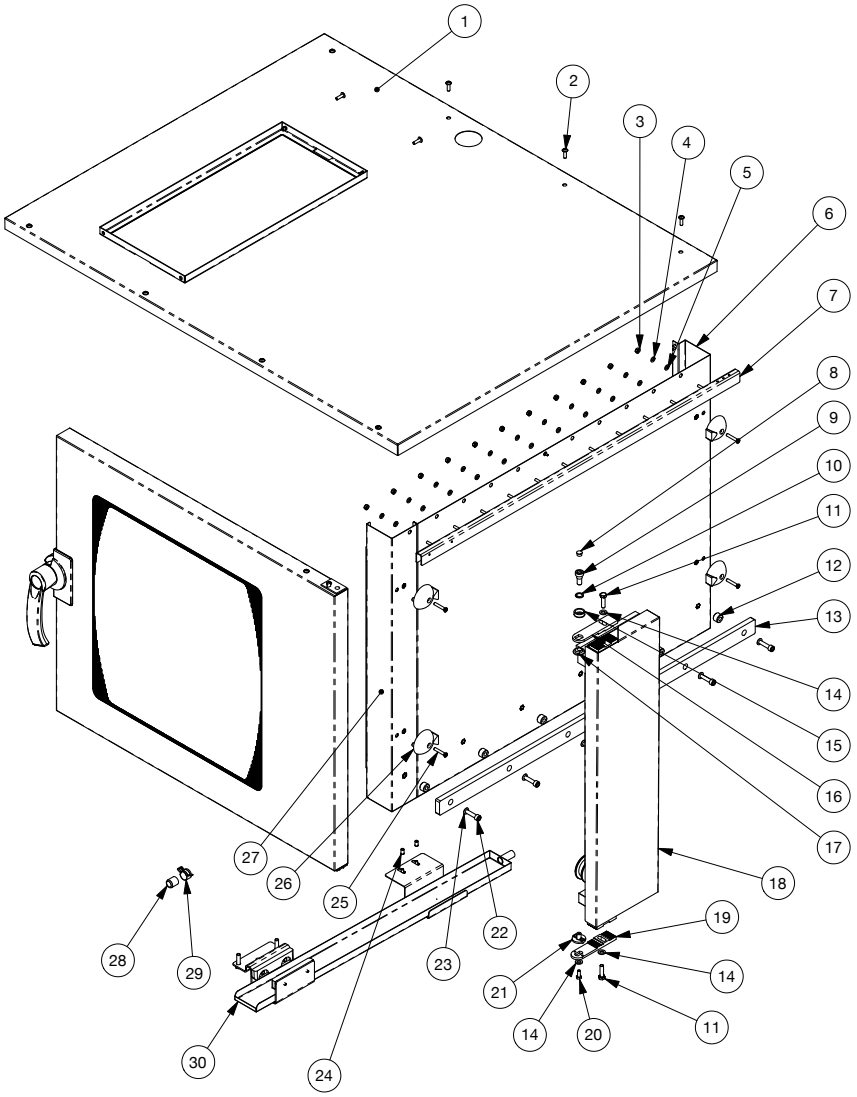

5012762

Item	Part	Description	Qty.
1	5012656	Outer Top Cover Assembly, 6.10ESG, 10.10ESG, CombiClean	1
	5012761	Outer Top Cover Assembly, 7.14ESG, CombiClean	1
2	SC-25128	Screw, Truss Head, M6	10
3	NU-22291	Nut, Hex Head, M6	9
4	WS-22302	Washer, Split Lock, M6	11
5	WS-22297	Washer, Flat, M6	11
6	5009831	Right Side Assembly, 6.10ESG	1
	5009167	Right Side Assembly, 10.10ESG	1
	5009830	Right Side Assembly, 7.14ESG	1
7	5009168	Guide Rail Assembly, 6.10ESG, 10.10ESG	1
	5009746	Guide Rail Assembly, 7.14ESG	1
8	PG-25460	Plug	1
9	SC-25102	Upper Hinge Axis Screw	1
10	WS-25478	Washer, Serrated	1
11	SC-22279	Screw, Hex Head, M8	2
12	SP-28440	Rail Spacer	6
13	RA-28206	Rail, Bottom, 6.10ESG, 10.10ESG	1
13	RA-28292	Rail, Bottom, 7.14ESG	1
14	WS-22298	Washer, M8	3

Item	Part	Description	Qty.
15	WS-25127	Washer, Covering for Hinge	1
16	HG-28041	Hinge, Recessed Door	1
17	WS-25124	Washer, Eccentric	1
18	5009771	Trolley Assembly, 6.10esG	1
	5009140	Trolley Assembly, 10.10esG	1
	5009772	Trolley Assembly, 7.14esG	1
19	HG-28040	Hinge, Recessed Door	1
20	SC-22284	Screw, Hex Head, M6	1
21	HG-25101	Hinge, Lower, Ratchet	1
22	SC-24388	Screw, SHC M8	6
23	WS-24396	Washer, Serrated Bevel, M8	6
24	NU-22385	Insert Nut. Threaded, M5	2
25	SC-22283	Screw, Oval Head, M6	4
26	BK-27412	Block, Recessed Door	4
27	5009829	Corner Assembly, 6.10ESG	1
	5009166	Corner Assembly, 10.10ESG	1
	5009828	Corner Assembly, 7.14ESG	1
28	CP-29358	Cap, Push-on	1
29	CM-28145	Clamp, Hose, 20mm	1
30	5009736	Lower Drip Tray Assembly	1

PARTS INFORMATION

RECESSED DOOR ASSEMBLY — 10.20ESG, 20.20ESG

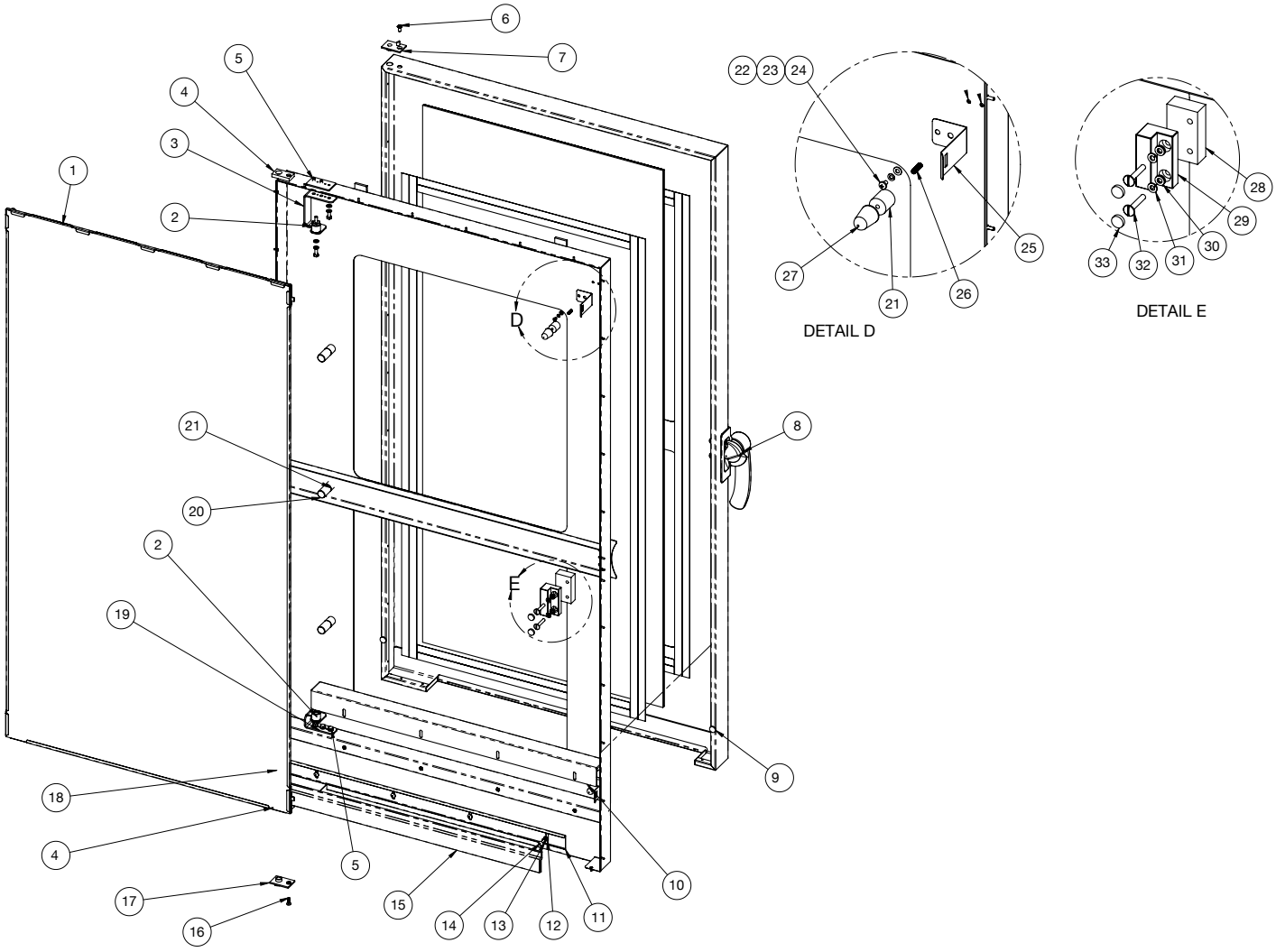

**Item Not Shown

Item	Part	Description	Qty.
–	5009740	Complete Right-hand Door Assembly, 10.20ESG	1
–	5009779	Complete Right-hand Door Assembly, 20.20ESG	1
1	5012128	Inner Door, Glass Assembly, 10.20ESG	1
	5012172	Inner Door, Glass Assembly, 20.20ESG	1
2	PI-26974	Pin, Lower	1
3	1010306	Hinge, Upper Glass Holder, 10.20ESG	1
	1009424	Hinge, Upper Glass Holder, 20.20ESG	1
4	HG-25078	Hinge, Anchor	2
5	SC-22284	Screw, Hex Head	8
6	SC-25085	Screw, Oveal Head	1
7	HG-25077	Hinge, Top Stop	1
8	HD-26966	Handle, Door, Right	1
9	SC-22753	Screws, Round, Hanging Rack	2
10	1010070	Backer, Sweep Support Gasket	1
11	1010294	Sweep Gasket Holder	1
12	WS-22295	Washer, Flat M5 Stainless Steel	4
13	WS-22301	Washer, Split Lock, M5	4
14	SC-27109	Screw, Truss Head, M5	4
15	GS-28593	Door Gasket	1
16	SC-22282	Screw, Phillips Head Oval Heavy-Duty	1

Item	Part	Description	Qty.
17	HG-25079	Hinge, Upper Ratchet	1
18	RI-27108	Rivet, Sealed	various
19	1009295	Hinge, Lower Glass Holder	1
20	BM-27146	Bumper Stop/Inner Door	3
21	SP-27657	Spacer, Glass, 20mm	5
22	WS-22294	Washer, Flat M4 Stainless Steel	2
23	WS-22300	Washer, Split Lock	2
24	SC-22271	Screws, Philips Head	2
25	LT-34777	Latch, Inner Door, 20.20ESG	2
26	SC-25091	Screw. Solid Set Flat	8
27	BM-25072	Bumper, Ribber	2
28	SP-27682	Spacer, Inner Glass Latch	1
29	SP-27212	Spacer, Window Latch	1
30	WS-22297	Washer, Flat, M6, DIN 125	12
31	WS-22302	Washer, Split Lock	10
32	SC-29089	Screw, Truss Head, M6	2
33	PG-24789	Plug, 15mm	2
**	GS-27127	Door Gasket, 10.20ESG	1
**	GS-27126	Door Gasket, 20.20ESG	1
**	1010752	Preheat Sealing Strip (to preheat units w/o roll-in trolley)	1

RECESSED DOOR TRACK — 12.18ESG, 10.20ESG, 20.20ESG

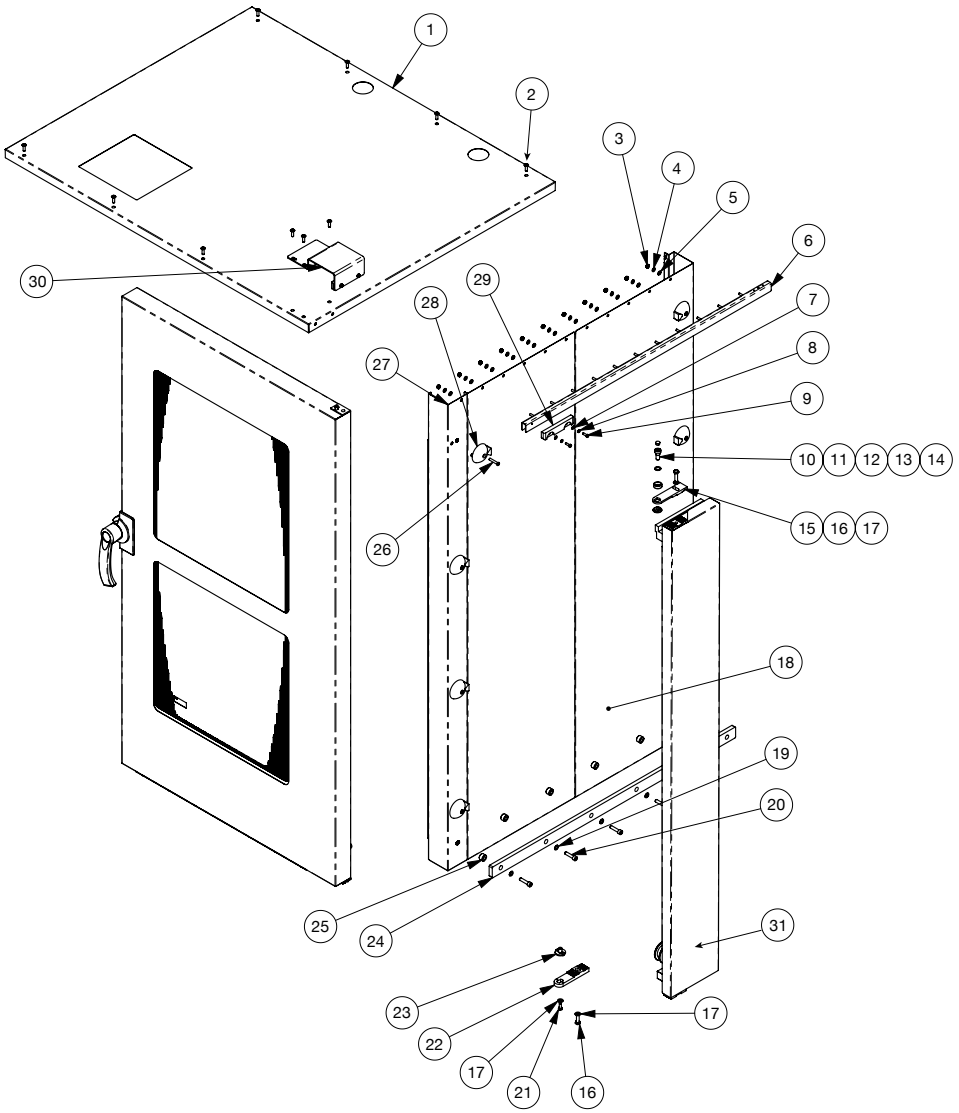

**Item Not Shown

Item	Part	Description	Qty.
1	5012765	Cover, Top, 12.18ESG, 10.20ESG, CombiClean	1
	1011729	Cover, Top, 20.20ESG, CombiClean	1
2	SC-25128	Screw, Truss Head, M6	10
3	NU-22291	Nut, Hex, M6	11
4	WS-22302	Washer, Split Lock, M6	11
5	WS-22297	Washer, Flat, M5	11
6	5009746	Guide Rail Assembly	1
7	WS-22295	Washer, Flat, M5	2
8	WS-22301	Washer, Split Lock, M5	2
9	SC-22926	HHCS, M5	2
10	SC-25102	Screw, Upper Hinge Axis	1
11	WS-25478	Washer, Serrated	1
12	WS-25127	Covering Washer for Hinge	1
13	WS-25124	Eccentric Washer	1
14	PG-25460	Plug	1
15	HG-28041	Hinge, Recessed Door	1
16	SC-22279	Screw, Hex Head, M8	2
17	WS-22298	Washer, M8	3

Item	Part	Description	Qty.
18	5009730	Right Hand Side Panel, 12.18ESG, 10.20ESG	1
	5010609	Right Hand Side Panel, 20.20ESG	1
19	WS-24396	Washer, Serrated Bevel, M8	6
20	SC-24388	Screw, SHC M8	6
21	SC-22284	Screw, Hex Head, M6	1
22	HG-28411	Hinge, Recessed Door	1
23	HG-25101	Hinge, Lower Ratchet	1
24	RA-28292	Rail, Bottom	1
25	SP-28440	Rail Spacer	6
26	SC-22283	Screw, Pan Head Oval, M6	8
27	5009729	Right-Front Corner Assembly, 12.18ESG, 10.20ESG	1
	5009848	Right-Front Corner Assembly, 20.20ESG	1
28	BK-27412	Block, Recessed Door	8
29	BK-28571	Cart Guide Block, White Teflon	1
30	5009954	Upper Door Guide	1
31	5009732	Recessed Door Trolley Assembly, 12.18ESG, 10.20ESG	1
	5009773	Recessed Door Trolley Assembly, 20.20ESG	1
**	5011866	Wear Pad Assembly, 12.18ESG	1

PARTS INFORMATION

ELECTRICAL ASSEMBLY — 6.10ESG, 10.10ESG, 7.14ESG, 12.18ESG, 10.20ESG

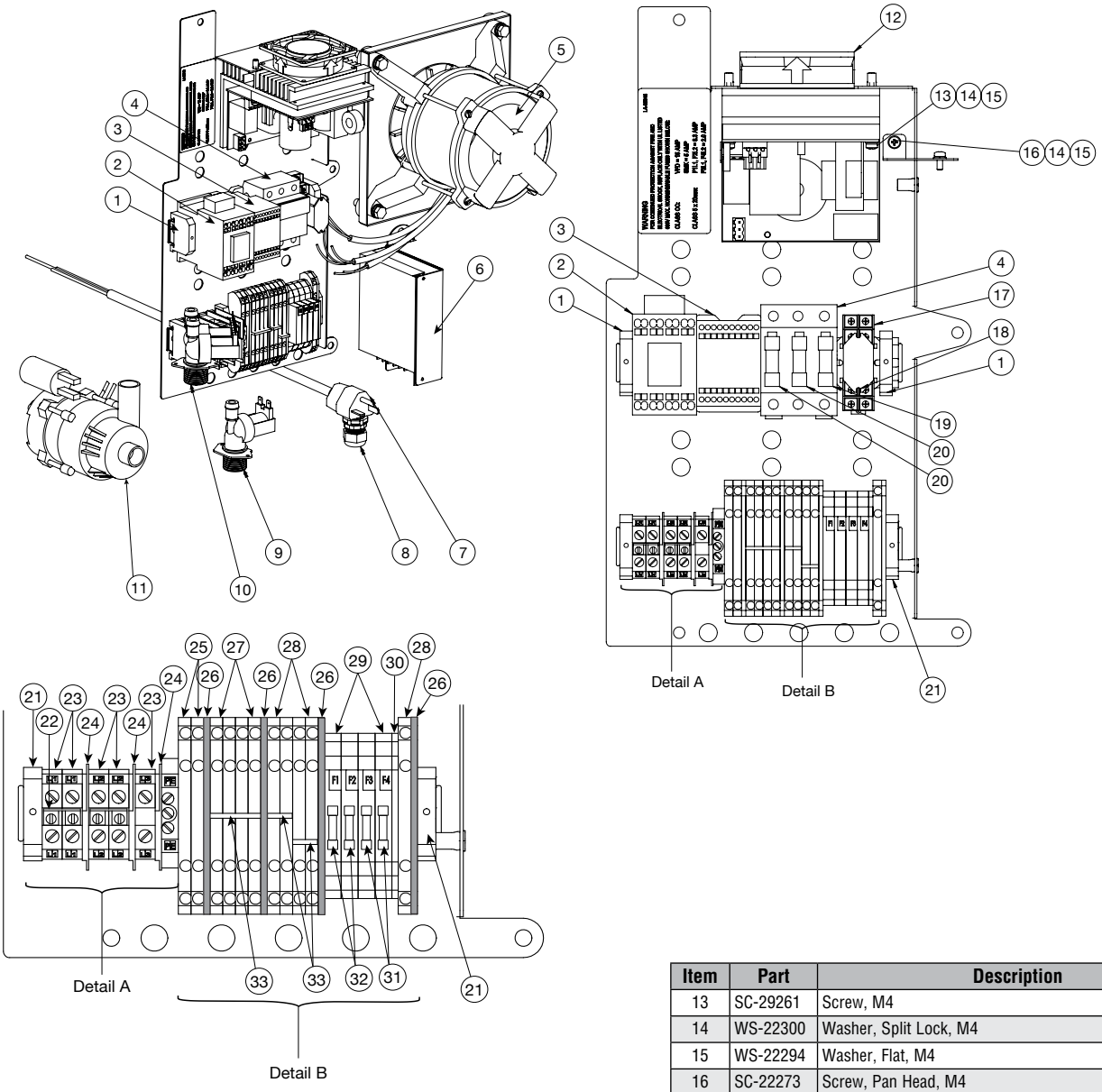

5012815

Item	Part	Description	Qty.
1	TM-34305	Terminal, Screwless End	2
2	CN-34343	Contactor, 25 Amp, 120V	4
	CN-34304	Contactor, 25 Amp, 208/240V	4
3	CN-34912	Contactor, 110V	1
	CN-34913	Contactor, 230V	1
4	FU-34770	Fuse Holder, 3 Bank (208V - 3ph)	1
5	5012299R	Motor Assembly, Reversible	1
6	BA-34508	Power Supply Assembly	1
7	CD-3397	Cordset, 125V Plug (120V units only)	1
8	BU-3964	Bushing, Straight, Strain Relief, 120V units only	2
9	VA-34344	Valve, Single Solenoid, 120V, Untreated	1
	VA-34300	Valve, Single Solenoid, 208V, Untreated	1
10	VA-34461	Valve, Double Solenoid, 120V, Treated	1
	VA-34045	Valve, Double Solenoid, 208V, Treated	1
11	MO-34635	Pump, Circulation, 110V, 120V units only	1
	MO-34636	Pump, Circulation, 208V	1
12	BA-34676	Board, Reversible Motor	1

Item	Part	Description	Qty.
13	SC-29261	Screw, M4	2
14	WS-22300	Washer, Split Lock, M4	4
15	WS-22294	Washer, Flat, M4	4
16	SC-22273	Screw, Pan Head, M4	2
17	RL-34634	Socket, Relay Smoke	1
18	RL-34279	Relay, Smoke, 120V	1
	RL-33483	Relay, Smoke, 208V	1
19	FU-34784	Fuse, 5 Amp	4
20	FU-34772	Fuse, 15 Amp	2
21	TM-34305	Terminal, Screwless End	1
22	TM-33675	Jumper Strip	2
23	TM-3779	Terminal Block	5
24	TM-3785	Partition	3
25	TM-34306	Terminal, Ground, 6mm Spring	2
26	TM-34309	Terminal, End Section, Spring	4
27	TM-34308	Terminal, 6mm, Blue Spring	4
28	TM-34307	Terminal, 6mm, Orange Spring	5
29	TM-34311	Terminal, Fuse Holder, 8mm	4
30	TM-34315	Terminal, End Plate	1
31	FU-33184	Fuse, Slow Blo, 2 Amp, 250V	4
32	FU-33452	Fuse, Neozed, 6.3 Amp	4
33	TM-34310	Jumper Bar	2

ELECTRICAL ASSEMBLY — 20.20ESG

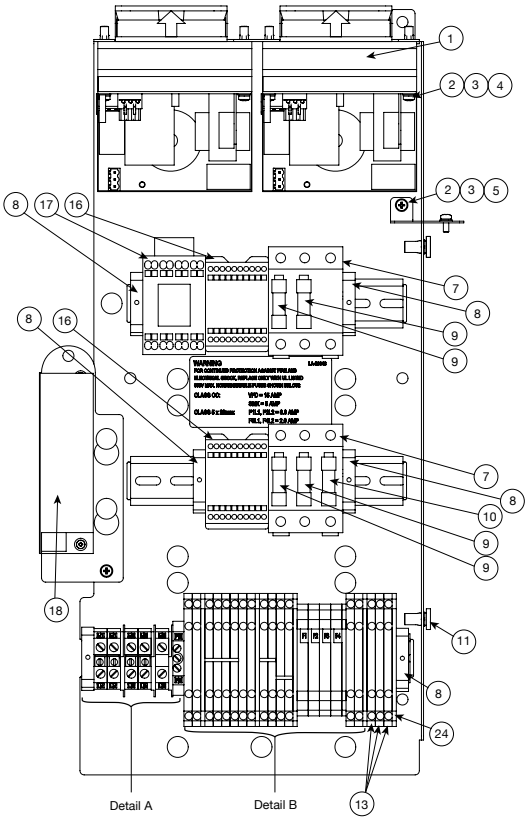

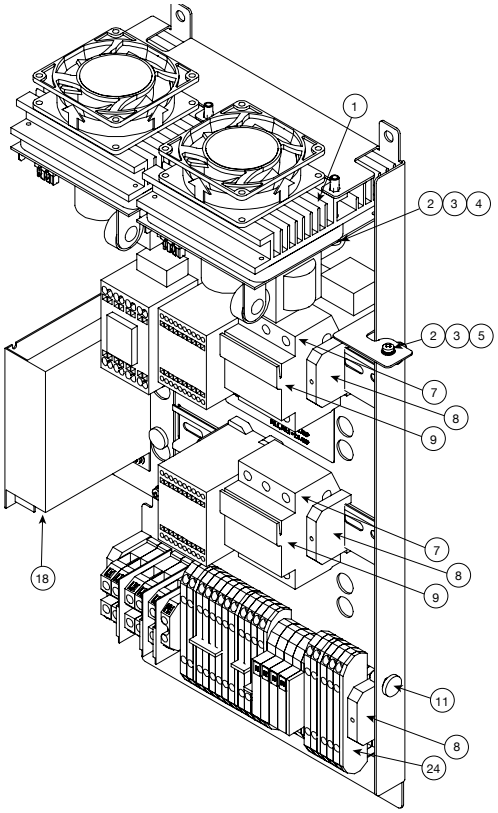

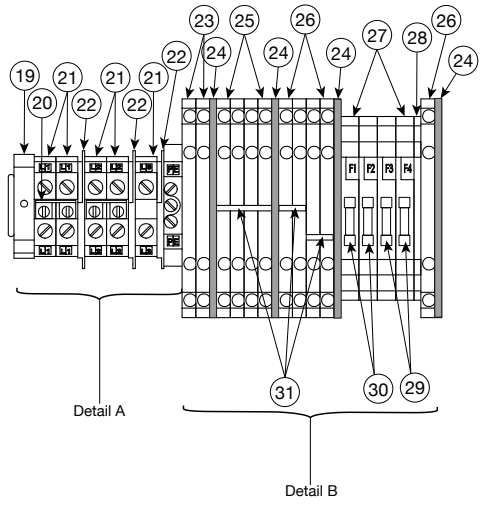

Item	Part	Description	Qty.
1	BA-34676	Board, Reversible Motor	2
2	WS-22294	Washer, Flat, M4	6
3	WS-22300	Washer, Split Lock, M4	6
4	SC-29261	Screw, M4	4
5	SC-22273	Screw, Pan Head, M4	2
6	RL-33483*	Relay, Smoke	1
7	FU-34770	Fuse Holder, 3 Bank	2
8	TM-34305	Terminal, Screwless End	5
9	FU-34772	Fuse, 15 Amp	4
10	FU-34784	Fuse, 5 Amp	1
11	SC-22753	Screw Round	5
12	5012299R*	Motor Assembly, Reversible	2
13	TM-34308	Terminal, 6mm, Blue Spring	3

5012042
*not shown

Item	Part	Description	Qty.
14	RL-34634*	Socket, Relay Smoke	1
15	MO-34635*	Pump, Circulation, 110V	1
	MO-34636*	Pump, Circulation, 208V	1
16	CN-34912	Contactor, 110V, 120V Units Only	2
	CN-34913	Contactor, 230V, 208V Units Only	2
17	CN-34343	Contactor, 25 Amp, 120V Units Only	1
	CN-34304	Contactor, 25 Amp, 208/240V Units Only	1
18	BA-34508	Power Supply Assembly	1
19	TM-34305	Terminal, Screwless End	1
20	TM-33675	Jumper Strip	2
21	TM-3779	Terminal Block	5
22	TM-3785	Partition	3
23	TM-34306	Terminal, Ground, 6mm Spring	2
24	TM-34309	Terminal, End Section, Spring	1
25	TM-34308	Terminal, 6mm, Blue Spring	3
26	TM-34307	Terminal, 6mm, Orange Spring	6
27	TM-34311	Terminal, Fuse Holder, 8mm	4
28	TM-34315	Terminal, End Plate	1
29	FU-33184	Fuse, Slow Blo, 2 Amp, 250V	4
30	FU-33452	Fuse, Neozed, 6.3 Amp	4
31	TM-34310	Jumper Bar	2
32	CD-33367*	Cordset, 125V - 30Amp Plug (120V units only)	1
33	BU-3964*	Bushing, Straight, Strain Relief (120V units only)	1
34	VA-34344*	Valve, Single Solenoid, 120V, Untreated	1
	VA-34300*	Valve, Single Solenoid, 208V, Untreated	1
35	VA-34461*	Valve, Double Solenoid, 120V, Treated	1
	VA-34045*	Valve, Double Solenoid, 208V, Treated	1

WIRING DIAGRAMS

Always refer to the wire diagram(s) included with the unit for most current version.

120V, 60Hz, 1ph

77334 – 6•10ESG, 7•14ESG, 10•10ESG 79
77345 – 10•20ESG, 12•18ESG. 82
77335 – 20•20ESG 87

208-240V, 60Hz, 1ph or 3ph

77333 – 6•10ESG, 7•14ESG, 10•10ESG 92
77344 – 10•20ESG, 12•18ESG. 96
77341 – 20•20ESG 100

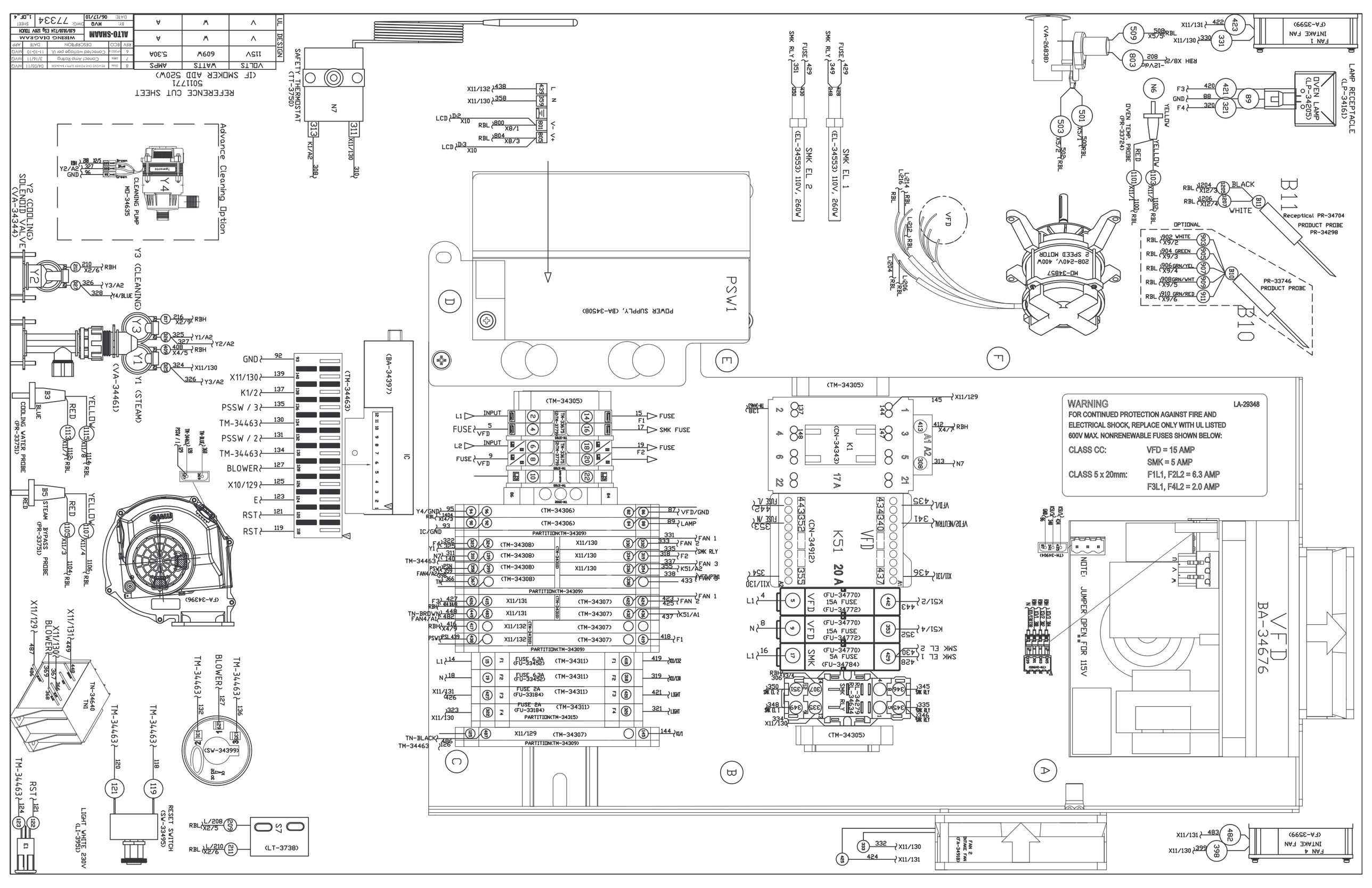

VOLTS	WATTS	AMPS
115V	609W	5.30A
V	W	A
V	W	A
V	W	A

UL DESIGN

ALTO-SHAAM
WIRING DIAGRAM
CM/10GN/7/14 E3 DEV TOUCH

REV	ECO	DESCRIPTION	DATE	APP
6	19000	Connected wiring per UL	11-10-10	MVC
7	24ed	Direct Amp Rating	3/16/11	MVC
8	3144	REPLACE CUT SHEET POWER SUPPLY #BA-34508	04/05/11	MVC

BY: MVC
DATE: 06/17/10
DWG: 77334
SHEET 1 OF 4

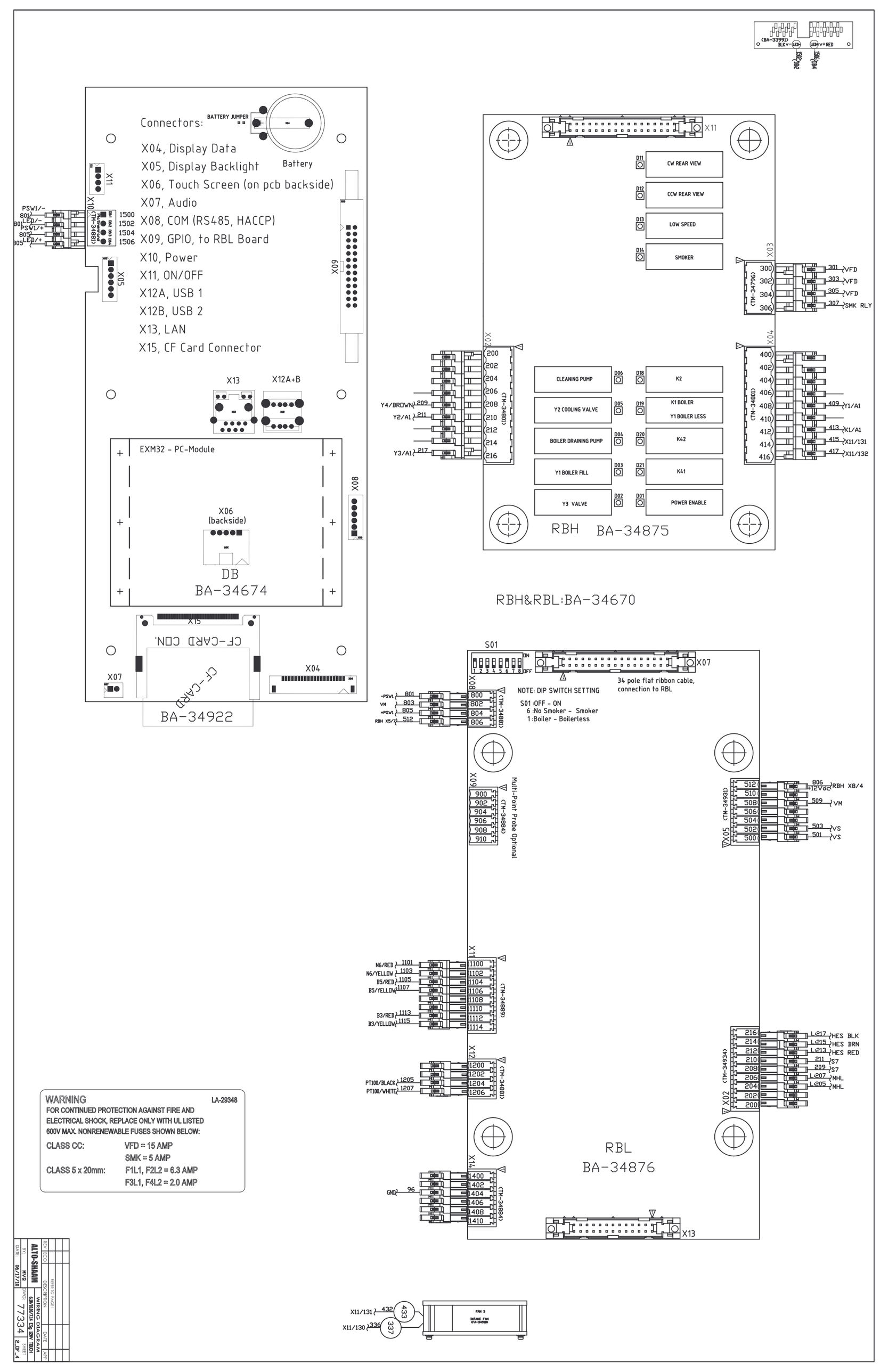
Connectors:
X04, Display Data
X05, Display Backlight
X06, Touch Screen (on pcb backside)
X07, Audio
X08, COM (RS485, HACCP)
X09, GPIO, to RBL Board
X10, Power
X11, ON/OFF
X12A, USB 1
X12B, USB 2
X13, LAN
X15, CF Card Connector
BATTERY JUMPER
Battery
EXM32 - PC-Module
DB
BA-34674
CF-CARD CON.
BA-34922
RBH
BA-34875
CW REAR VIEW
CCW REAR VIEW
LOW SPEED
SMOKER
CLEANING PUMP
Y2 COOLING VALVE
BOILER DRAINING PUMP
Y1 BOILER FILL
Y3 VALVE
K2
K1 BOILER
Y1 BOILER LESS
K42
K41
POWER ENABLE
RBH&RBL:BA-34670
34 pole flat ribbon cable,
connection to RBL
NOTE: DIP SWITCH SETTING
S01 :OFF - ON
6 :No Smoker - Smoker
1 :Boiler - Boilerless
Multi-Point Probe Optional
RBL
BA-34876
WARNING
LA-29348
FOR CONTINUED PROTECTION AGAINST FIRE AND
ELECTRICAL SHOCK, REPLACE ONLY WITH UL LISTED
600V MAX. NONRENEWABLE FUSES SHOWN BELOW:
CLASS CC: VFD = 15 AMP
SMK = 5 AMP
CLASS 5 x 20mm: F1L1, F2L2 = 6.3 AMP
F3L1, F4L2 = 2.0 AMP
ALTO-SHAAM
WIRING DIAGRAM
77334
2 OF 4

L1

L2

4

17 15A FEB SMK

9 15A VFD

5 15A MTR

2: FU-34784
FU-34770
2: FU-34772

429 430 442

CN-34913

2 4 6
1 3 5
K51

GREEN
86 87

LINE
434 435

NEUTRAL
340 341

BA-34676
VFD
339 301 303 305

MD-34857
MTR

SK1/2 430 350 SK1/1
2: EL-34554
SMOKER
ELEMENTS
SMOKER OPTION
SK2/2 428 348 SK2/1

X10
DB1 DB2 DB3 DB4
Ø Ø Ø Ø

25 318 F2 8A 319 PSN
2: FUSE HOLDER FU-34311
2: FU-33452
5 418 F1 8A 419 PSL
417
359 PSW1 BA-34508 12VDC 360
435 805

ALTO-SHAAM LED
BA-33991

SMOKER OPTION
RL-3429
RL-34634
345 346

RBH X3/4
305 307 309 311 313 315
306 308 310 312 314 316
334
X11/131

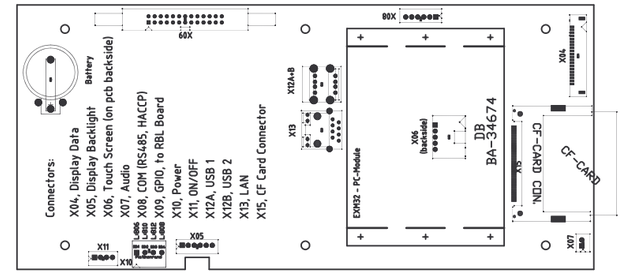

1105 RBL
1104 RBL
YELLOW 1107 X11/4
RED 1106 X11/3
B5 STEAM PROBE (PR-33751)

1102 RBL
1100 RBL
1103 X11/2
1101 X11/1
N6 DVEN TEMP. PROBE (PR-33724)

1114 RBL
1112 RBL
YELLOW 1115 X11/8
RED 1113 X11/7
B3 COOLING WATER PROBE (PR-33751)

B11 Receptical PR-34298
PRODUCT PROBE PR-34299
WHITE 811
BLACK 811
RBL 1206 X12/5 (207)
RBL 1204 X12/4 (208)

VM: VENT MOTOR
VS: VENT SWITCH
FUSE VFD: FUSE CONTROL VFD
FUSE SMK: FUSE CONTROL SMOKER
VFD: VARIABLE FREQUENCY DRIVE
DB3& DB4: DISPLAY BOARD + DC INPUT
DB1& DB2: DISPLAY BOARD - DC INPUT

X11/130: BANK OF 3 BLUE SPRING TERMINALS
B1: BLUE UPPER WATER LEVEL STEAM TANK
B2: RED LOWER WATER LEVEL STEAM TANK
B3: BLUE PROBE CONDENSATION TANK
B5: RED PROBE CONDENSATION TANK
PSW: 12Vdc POWER SUPPLY
S7: DOOR SWITCH
N7: SAFETY HIGH LIMIT
K41 & K42: CONTROL CONVECTION
DP1: BOILDER DRAIN PUMP
E1, E2, E3: H2O ELEMENT
E4: CONVECTION ELEMENT
SMK RLY: SMOKER RELAY
SMK EL: SMOKER ELEMENT
K51 & K52: MOTOR DRIVE CONTACTOR

437

RBH
BA-34875

X04 (TM-34801) 416 414 412 410 408 406 404 402 400
X03 (TM-34796) 306 304 302 300
X02 (TM-34801) 200 202 204 206 208 210 212 214 216

K1 Y1
426 415
427 F3 8A 428
CAVITY LAMP 420
88 89
F4 8A 320
322
SAFETY THERMOSTAT 308 313 N7 311 310
323
324

K51 436 353
SMK RLY 307 335
355 334

MD-34636 CLEAN PUMP 328 A1 Y2 326 Y3 VA-34045
A1 Y2 327 Y3 VA-34300 Y2 VA-34300

X02 (TM-34934) L-200 L-202 L-204 L-206 L-208 L-210 L-212 L-214 L-216
DOOR SAFETY SWITCH
HL RED
HL BRDWN
HL BLACK

X05 (TM-34931) 500 502 504 506 508 510 512
VENT MOTOR SW
120DC MOTOR

X08 (TM-34881) 800 802 804 806

Multi-Point Probe Optional
X09 (TM-34884) 900 902 904 906 908 910

RBL
BA-34876

X11 (TM-34889) 1100 1102 1104 1106 1108 1110 1112 1114
N6/RED 1101 1103
N6/YELLOW 1105
B5/RED 1107
B5/YELLOW
B3/RED 1113
B3/YELLOW 1115

X12 (TM-34881) 1200 1202 1204 1206
PT100/BLACK 1205
PT100/WHITE 1207

X14 (TM-34884) 1400 1402 1404 1406 1408 1410
96

S01
ON OFF
1 2 3 4 5 6 7 8

S01:OFF - ON
6 :No Smoker - Smoker
1 :Boiler - Boilerless

NOTE: DIP SWITCH SETTING

REV	ECO	DESCRIPTION	DATE	APP
		REFER TO PAGE 1		

ALTO-SHAAM

WIRING DIAGRAM

6.10/1010/714 ESg 120V TOUCH

BY: HVQ
DATE: 06/17/10

DWG: 77334

SHEET 3_OF_4

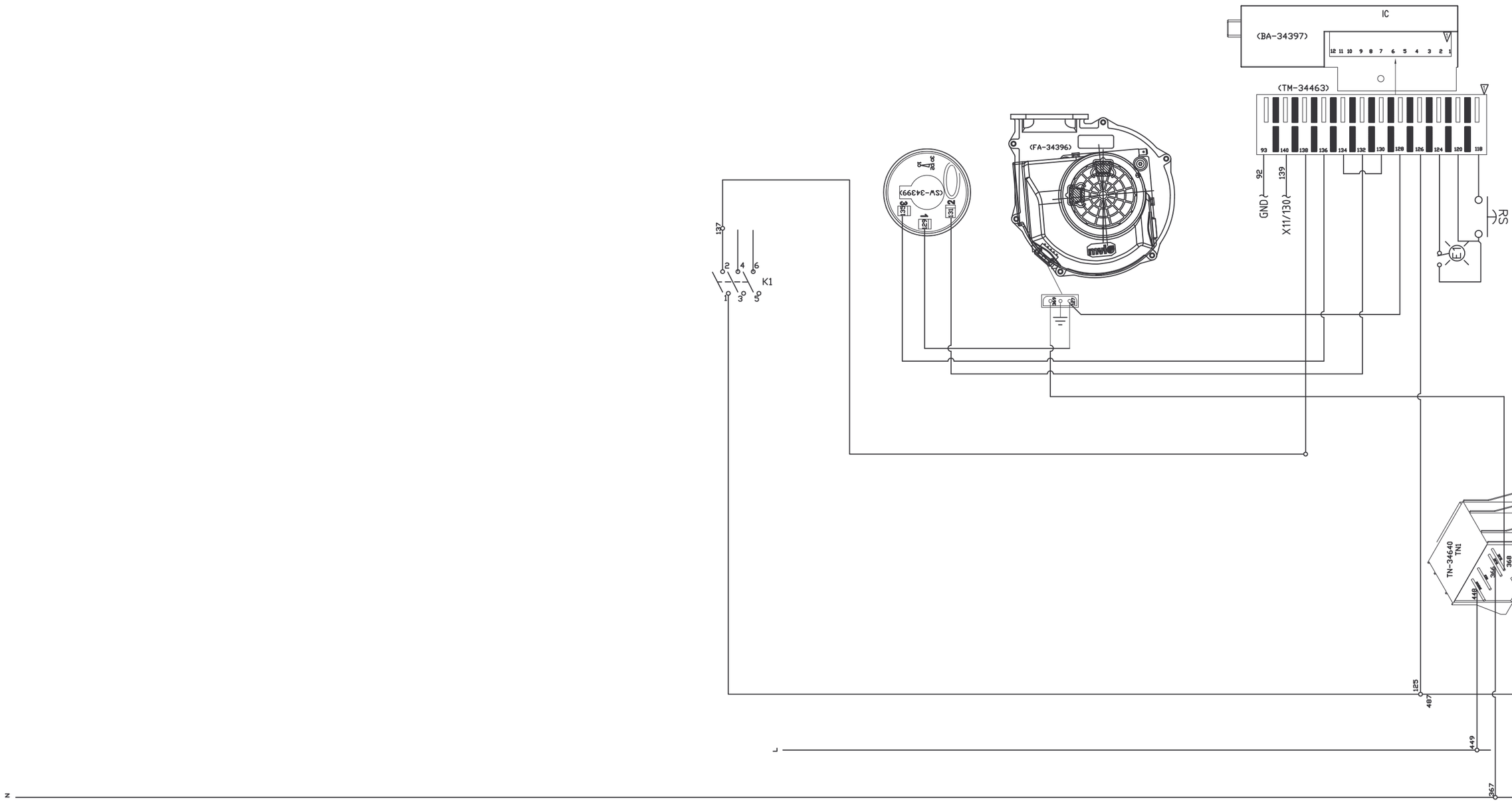

		REFER TO PAGE 1			
REV	ECO	DESCRIPTION		DATE	APP
ALTO-SHAAM		WIRING DIAGRAM			
		630/1630/724 ESg 120V TOUCH			
BY:	HVQ	DWG:	77334	SHEET	
DATE:	06/17/10			4_OF_4	

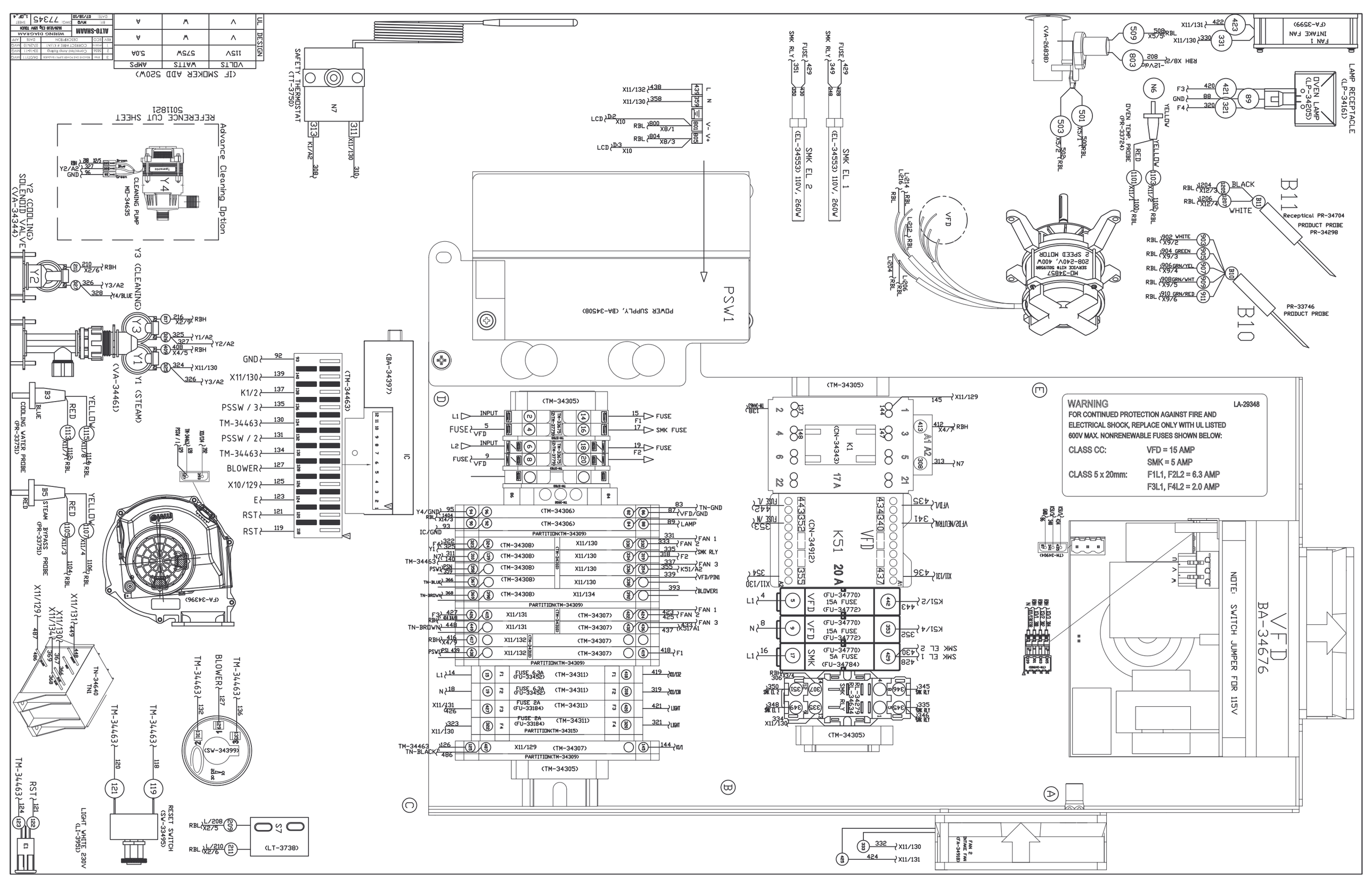
WARNING
LA-29348
FOR CONTINUED PROTECTION AGAINST FIRE AND ELECTRICAL SHOCK, REPLACE ONLY WITH UL LISTED 600V MAX. NONRENEWABLE FUSES SHOWN BELOW:
CLASS CC: VFD = 15 AMP
SMK = 5 AMP
CLASS 5 x 20mm: F1L1, F2L2 = 6.3 AMP
F3L1, F4L2 = 2.0 AMP
VFD
BA-34676
NOTE: SWITCH JUMPER FOR 115V
PSW1
POWER SUPPLY, (BA-34508)
K51
20 A
(CN-34912)
(CN-34343)
K1
17 A
(TM-34305)
(TM-34306)
(TM-34308)
(TM-34307)
(TM-34311)
(TM-34463)
(BA-34397)
IC
(FA-34396)
(SW-34399)
(LT-3738)
S7
RESET SWITCH (SV-33495)
LIGHT WHITE 230V (LI-3951)
TN-34640 TN1
Advance Cleaning Option
REFERENCE CUT SHEET 5011821
CLEANING PUMP MD-34635
Y4
Y2
Y3 (CLEANING)
Y1 (STEAM)
(VA-34461)
Y2 (COOLING) SOLENOID VALVE (VA-34344)
COOLING WATER PROBE (PR-33751)
STEAM BYPASS PROBE (PR-33751)
SAFETY THERMOSTAT (TT-3750)
N7
(IF SMOKER ADD 520W)
VOLTS 115V 575V 5.0A
WATTS 115V 575V 5.0A
AMPS 5.0A
UL DESIGN
ALTO-SHAM
773745
SMK EL 2 (EL-34553) 110V, 260W
SMK EL 1 (EL-34553) 110V, 260W
SMK RLY
FUSE
FAN 1 INTAKE FAN (FA-3399)
LAMP RECEPTACLE (LP-34161)
OVEN LAMP (LP-34205)
OVEN TEMP. PROBE (PR-33724)
(VA-26838)
MD-34857 208-240V, 400V 2 SPEED MOTOR
VFD
B11
Receptical PR-34704
PRODUCT PROBE PR-34298
B10
PR-33746 PRODUCT PROBE
FAN 2 INTAKE FAN (FA-34918)

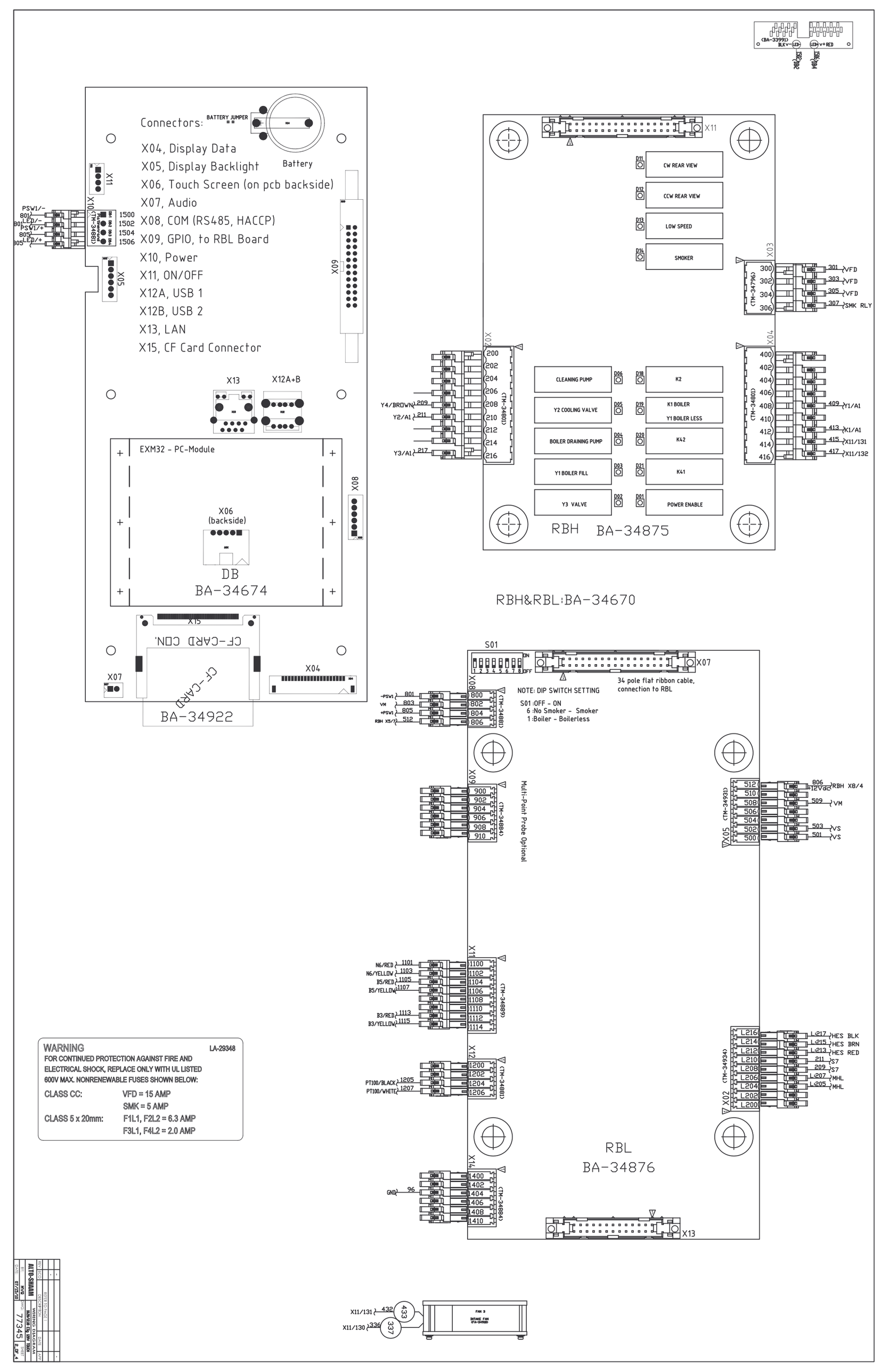
Connectors:
X04, Display Data
X05, Display Backlight
X06, Touch Screen (on pcb backside)
X07, Audio
X08, COM (RS485, HACCP)
X09, GPIO, to RBL Board
X10, Power
X11, ON/OFF
X12A, USB 1
X12B, USB 2
X13, LAN
X15, CF Card Connector
BATTERY JUMPER
Battery
EXM32 - PC-Module
DB
BA-34674
CF-CARD CON.
BA-34922
CW REAR VIEW
CCW REAR VIEW
LOW SPEED
SMOKER
CLEANING PUMP
Y2 COOLING VALVE
BOILER DRAINING PUMP
Y1 BOILER FILL
Y3 VALVE
K2
K1 BOILER
Y1 BOILER LESS
K42
K41
POWER ENABLE
RBH BA-34875
RBH&RBL:BA-34670
NOTE: DIP SWITCH SETTING
S01:OFF - ON
6 :No Smoker - Smoker
1 :Boiler - Boilerless
34 pole flat ribbon cable, connection to RBL
Multi-Point Probe Optional
RBL
BA-34876
WARNING
LA-29348
FOR CONTINUED PROTECTION AGAINST FIRE AND ELECTRICAL SHOCK, REPLACE ONLY WITH UL LISTED 600V MAX. NONRENEWABLE FUSES SHOWN BELOW:
CLASS CC: VFD = 15 AMP
SMK = 5 AMP
CLASS 5 x 20mm: F1L1, F2L2 = 6.3 AMP
F3L1, F4L2 = 2.0 AMP
ALTO-SHAAM
WIRING DIAGRAM
7734

L1

L2

4

17 9 5

FU-34784
FU-34770
FU-34772

429 442

CN-34913

2 4 6

K51

1 3 5

GREEN

86 87

BA-34676
VFD

339
301
303
305

MO-34857
MTR

LINE

434 435

NEUTRAL

340 341

SK1/2 430 350 SK1/1

2: EL-34554
SMOKER
ELEMENTS

SMOKER OPTION

SK2/2 428 348 SK2/1

X10

DB1 DB2 DB3 DB4

25 318 PSN 319

2: FUSE HOLDER FU-34311
2: FU-33452

5 418 419 PSL 439

F2 F1

PSW1
BA-34508
12VDC

359 805 801

ALTO-SHAAM LED
BA-33991

SMOKER OPTION
RL-3429
RL-34634

345 346

RBH X3/4

305 303 301 339 334

X11/131

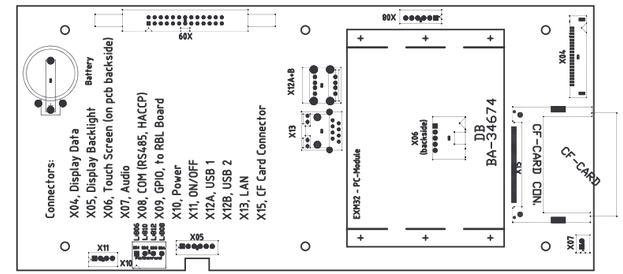

1106 RBL
1104 RBL
YELLOW 1107 X11/4
RED 1105 X11/3
B5 STEAM PROBE (PR-33751)

1102 RBL
1100 RBL
YELLOW 1103 X11/2
RED 1101 X11/1
N6 DVEN TEMP. PROBE (PR-33724)

1114 RBL
1112 RBL
YELLOW 1115 X11/8
RED 1113 X11/7
B3 COOLING WATER PROBE (PR-33751)

B11 Receptical PR-34298
PRODUCT PROBE
PR-34299
WHITE 1208 RBL X12/6 (208)
BLACK 1204 RBL X12/4 (204)

VM: VENT MOTOR
VS: VENT SWITCH
FUSE VFD: FUSE CONTROL VFD
FUSE SMK: FUSE CONTROL SMOKER
VFD: VARIABLE FREQUENCY DRIVE
DB3& DB4: DISPLAY BOARD + DC INPUT
DB1& DB2: DISPLAY BOARD - DC INPUT

X11/130: BANK OF 3 BLUE SPRING TERMINALS
B1: BLUE UPPER WATER LEVEL STEAM TANK
B2: RED LOWER WATER LEVEL STEAM TANK
B3: BLUE PROBE CONDENSATION TANK
B5: RED PROBE CONDENSATION TANK
PSW: 12Vdc POWER SUPPLY
S7: DOOR SWITCH
N7: SAFETY HIGH LIMIT
K41 & K42: CONTROL CONVECTION
DP1: BOILDER DRAIN PUMP
E1, E2, E3: H2O ELEMENT
E4: CONVECTION ELEMENT
SMK RLY: SMOKER RELAY
SMK EL: SMOKER ELEMENT
K51 & K52: MOTOR DRIVE CONTACTOR

RBH
BA-34875

437

(TM-34801) X04: 416 414 412 410 408 406 404 402 400

(TM-34796) X03: 306 304 302 300

(TM-34801) X02: 200 202 204 206 208 210 212 214 216

K1 413 308 Y1 A1 Y1: VA-34044

K51 436 SMK RLY 307

CAVITY LAMP 427 F3 420 F4 320

SAFETY THERMOSTAT N7 313 311

CLEAN PUMP MO-34635 328 A1 Y2 Y2: VA-34344 326

A1 Y3 Y3: VA-34461 327

88 89 322 323 310 324 353 355 334

RBL
BA-34876

Multi-Point Probe Optional

X02 (TM-34934): L-200 L-202 L-204 L-206 L-208 L-210 L-212 L-214 L-216

DOOR SAFETY SWITCH: HL RED, HL BRDWN, HL BLACK

X05 (TM-34931): 500 502 504 506 508 510 512

VENT MOTOR SW

12DC MOTOR M

X08 (TM-34881): 800 802 804 806

X09 (TM-34884): 900 902 904 906 908 910

X11 (TM-34889): 1100 1102 1104 1106 1108 1110 1112 1114

X12 (TM-34881): 1200 1202 1204 1206

X14 (TM-34884): 1400 1402 1404 1406 1408 1410

N6/RED 1101 1103
N6/YELLOW 1105
B5/RED 1107
B5/YELLOW
B3/RED 1113 1115
B3/YELLOW
PT100/BLACK 1205 1207
PT100/WHITE

96

S01: OFF - ON
6 :No Smoker - Smoker
1 :Boiler - Boilerless

NOTE: DIP SWITCH SETTING

S01 ON OFF 1 2 3 4 5 6 7 8

(IFSMOKER ADD 520W)

		VOLTS	WATTS	AMPS
DESIGN		115V	1054W	9.2A
UL		V	W	A
		V	W	A

REV	ECO	DESCRIPTION	DATE	APP
		REFER TO PAGE 1		

ALTO-SHAAM — WIRING DIAGRAM
BA/BA-HD Elg 208/230/60

BY: HVQ
DATE: 07/18/10
DWG: 77345
SHEET: 3_OF_4

-	-			-
-	-	REFER TO PAGE 1		
REV	ECO	DESCRIPTION	DATE	APP
ALTO-SHAAM		WIRING DIAGRAM		
		10.28/12.18 ESq 120V TOUCH		
BY:	HVQ	DWG: 77345		SHEET
DATE:	07/15/10			4_OF_4

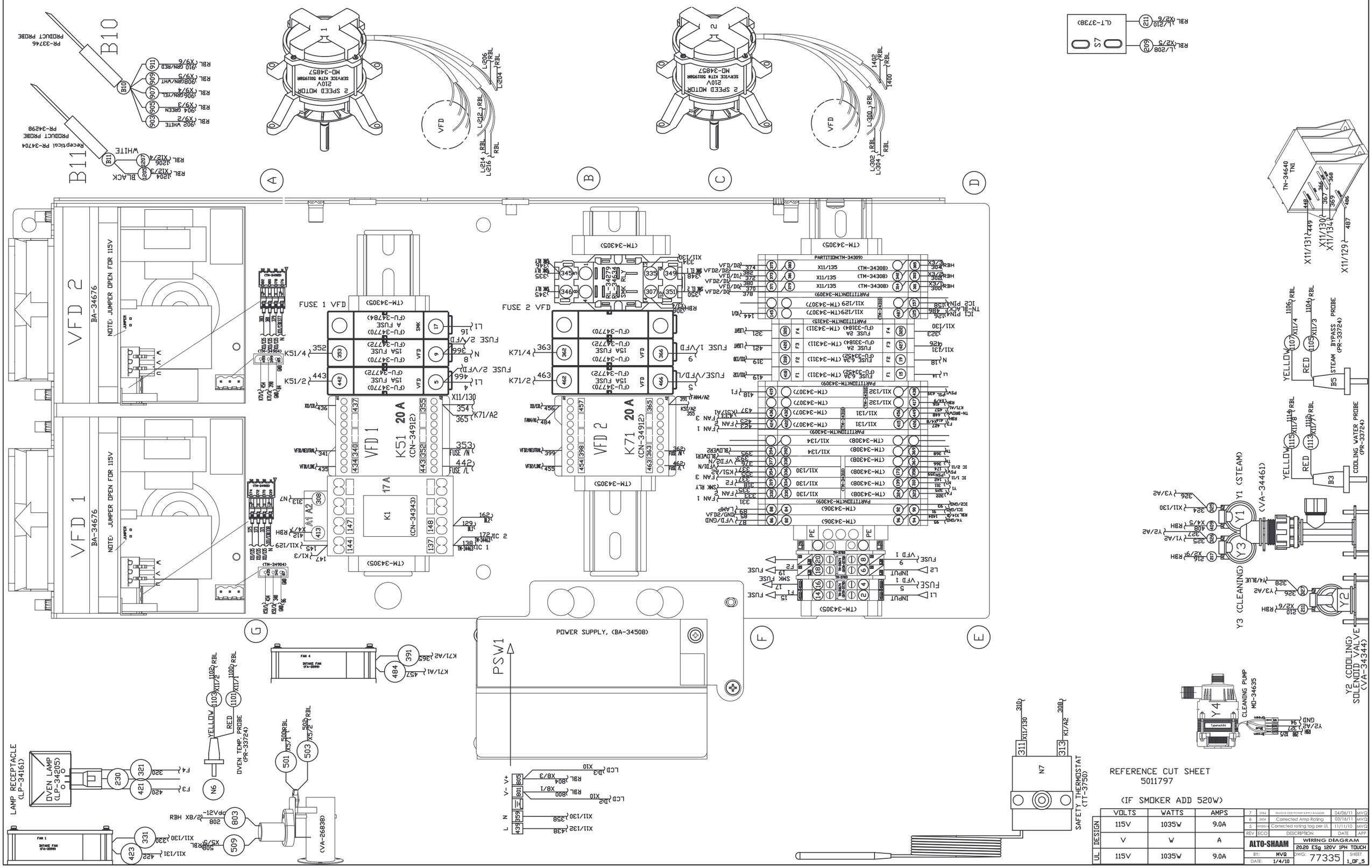

UL DESIGN	VOLTS	WATTS	AMPS
	115V	1035W	9.0A
	V	W	A
	115V	1035W	9.0A

REV	ECO	DESCRIPTION	DATE	APP
7	5964	REMOVE CH9 POWER SUPPLY BA34508	04/06/11	MVQ
6	5836	Corrected Amp Rating	03/16/11	MVQ
5	MP0001-4	Corrected rating tag per UL	11/11/10	MVQ

ALTO-SHAAM
WIRING DIAGRAM
20.20 ESg 120V 1PH TOUCH
BY: MVQ
DATE: 1/4/10
DWG: 77335
SHEET 1_OF_5

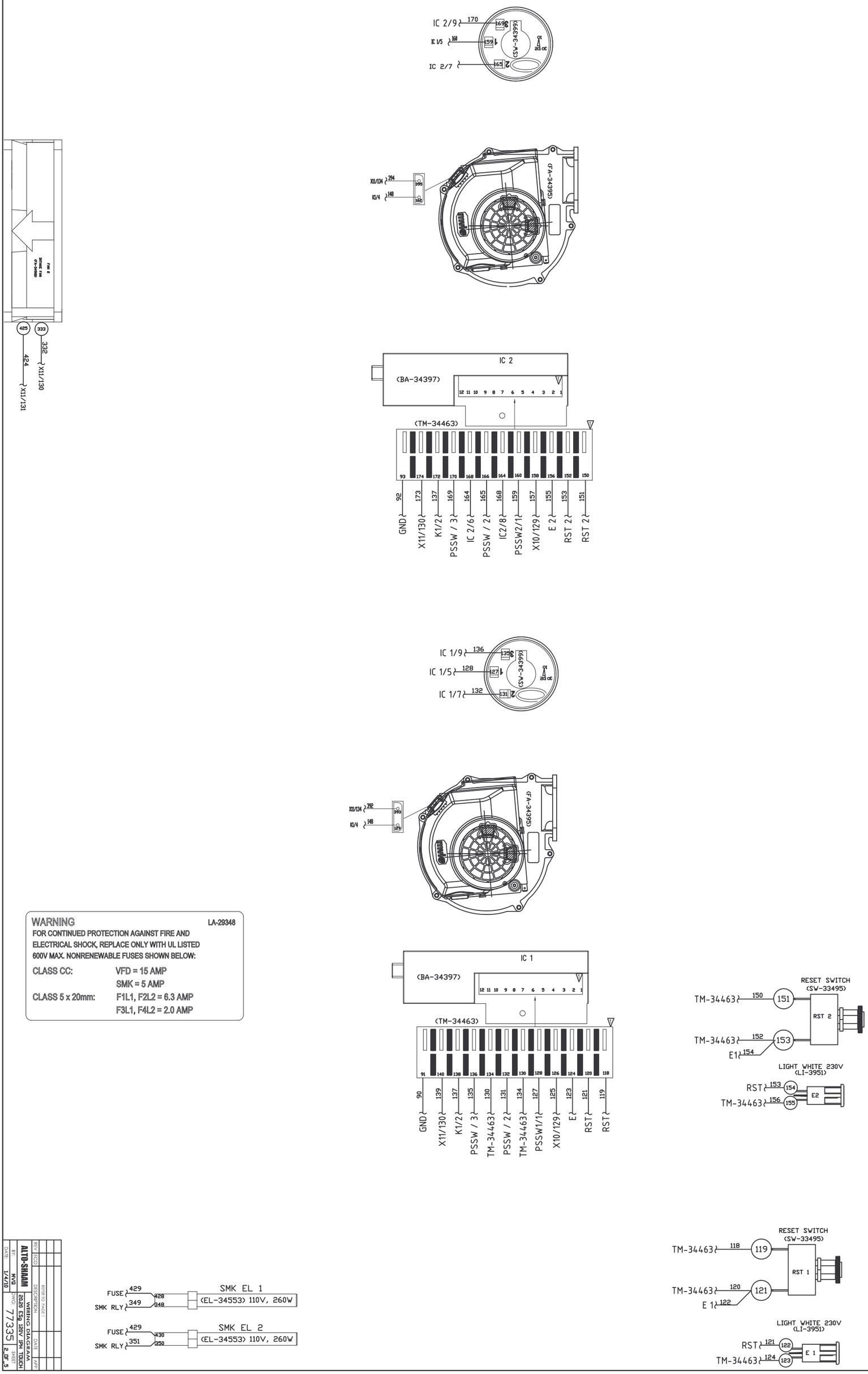

WARNING LA-29348

FOR CONTINUED PROTECTION AGAINST FIRE AND ELECTRICAL SHOCK, REPLACE ONLY WITH UL LISTED 600V MAX. NONRENEWABLE FUSES SHOWN BELOW:

CLASS CC:	VFD = 15 AMP
	SMK = 5 AMP
CLASS 5 x 20mm:	F1L1, F2L2 = 6.3 AMP
	F3L1, F4L2 = 2.0 AMP

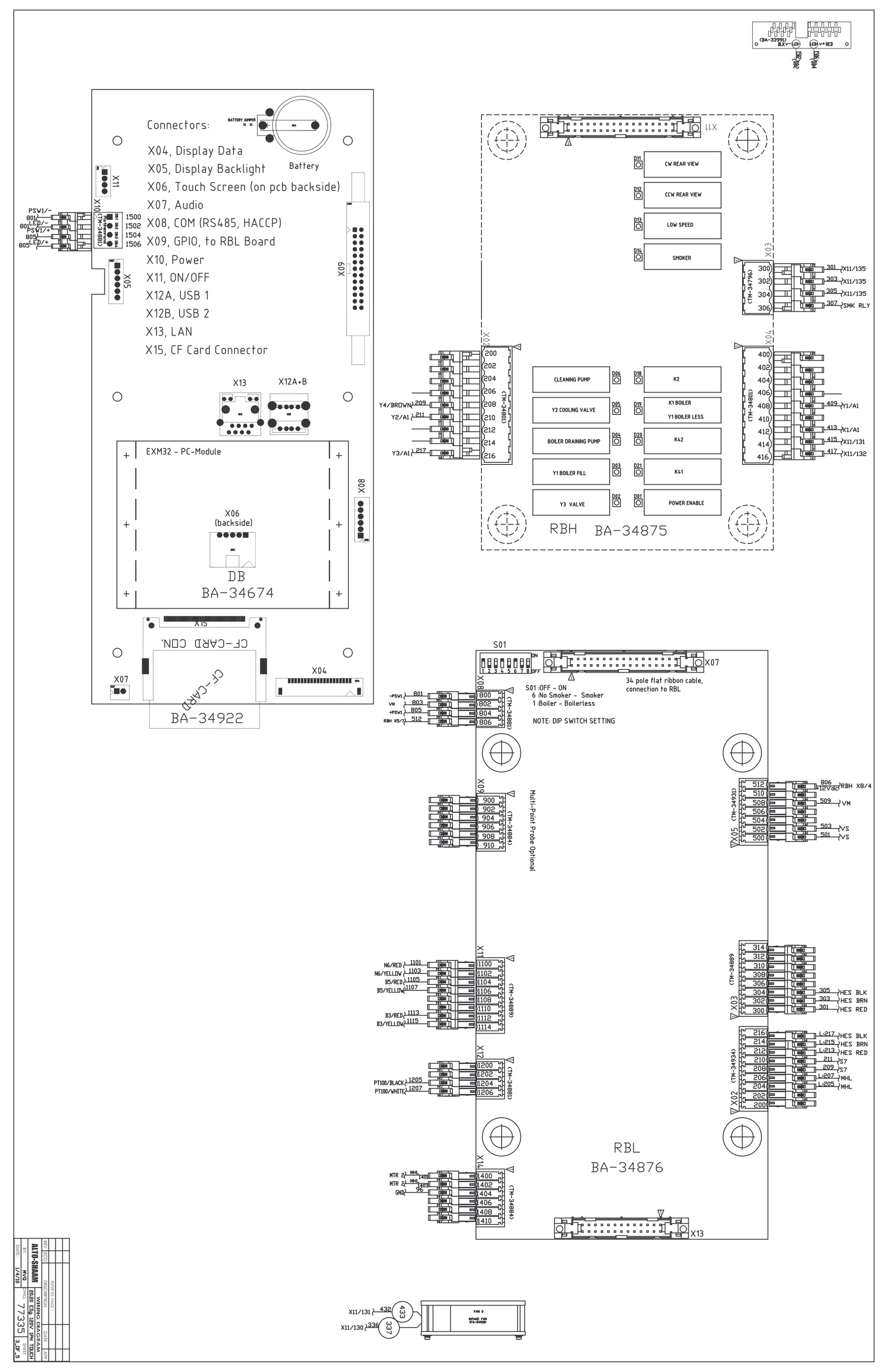

DATE	BY	REV	ECO	DESCRIPTION	DATE	APP	
1/4/10	KVG			REVISED PAGES			
DWG	ALTO-SHAAM			WIRING DIAGRAM			
77335	2UGR ES9 120V 1PH TOUCH						
SHEET	3 OF 5						

L1
N
4
24
FU-34770
FU-34772
353
442
CN-34913
K51
K71
466
366
462
362
GREEN
86
87
LINE
434
435
NEUTRAL
340
341
MD-34857
MTR1
MTR2
BA-34676
VFD
339
370
372
374
376
378
380
382
X10
DB1 DB2 DB3 DB4
Thermistor
PSN
PSL
PCSW1
BA-34369
12VDC
FUSE HOLDER FU-34311
FU-33452
F2
F1
ALTO-SHAAM LED
BA-33991
383
381
379
377
375
373
371
369
338
301
303
305
Connectors:
X04, Display Data
X05, Display Backlight
X06, Touch Screen (on pcb backside)
X07, Audio
X08, COM (RS485, HACCP)
X09, GPIO, to RBL Board
X10, Power
X11, ON/OFF
X12A, USB 1
X12B, USB 2
X13, LAN
X15, CF Card Connector
Battery
60X
80X
X12A+B
X13
X06 (backside)
EMS2- PC-Module
BA-34674
CF-CARD CONN.
CF-CARD
X04
X05
X07
X11
X10
B11
Receptical PR-34298
PRODUCT PROBE
PR-34298
WHITE
BLACK
118
(207)
(208)
RBL X12/4
RBL X12/5
RBL X206
RBL X207
1103
1101
1102
1100
YELLOW
RED
N6
DVEN TEMP PROBE
(PR-33724)
VM: VENT MOTOR
VS: VENT SWITCH
VFD: VARIABLE FREQUENCY DRIVE
DB3& DB4: DISPLAY BOARD + DC INPUT
DB1& DB2: DISPLAY BOARD - DC INPUT
X11/130: BANK OF 3 BLUE SPRING TERMINALS
B1: BLUE UPPER WATER LEVEL STEAM TANK
B2: BRED LOWER WATER LEVEL STEAM TANK
PSW: 12Vdc POWER SUPPLY
S3: DOOR SWITCH
N7: SAFETY HIGH LIMIT
K41 & K42: CONTROL CONVECTION
DP1: BOILDER DRAIN PUMP
E1, E2, E3: H2O ELEMENT
E4: CONVECTION ELEMENT
SMK RLY: SMOKER RELAY
SMK EL: SMOKER ELEMENT
K51 & K52: MOTOR DRIVE CONTACTOR
Multi-Point Probe Optional
X02 (TM-34934)
X03 (TM-34889)
X05 (TM-34931)
X08 (TM-34881)
X09 (TM-34884)
X11 (TM-34889)
X12 (TM-34881)
X14 (TM-34884)
(TM-34801)
(TM-34796)
X04
X03
X02
456
436
457
437
K1
K7
K5
Y1: VA-3404
Y3: VA-3446
Y2: VA-3434
MD-34635
CLEAN PUMP
Y4
CAVITY LAMP
SAFETY THERMOSTAT
HL RED
HL BROWN
HL BLACK
DOOR SAFETY SWITCH
VENT MOTOR SW
120DC MOTOR
M
N6/RED
N6/YELLOW
B5/RED
B5/YELLOW
B3/RED
B3/YELLOW
PT100/BLACK
PT100/WHITE
96
REFER TO PAGE 1
REV. ECO DESCRIPTION DATE APP
ALTO-SHAAM
WIRING DIAGRAM
20.20 ESg 120V 1PH TOUCH
BY: MVQ
DATE: 1/4/10
DWG: 77335
SHEET 4_OF_5

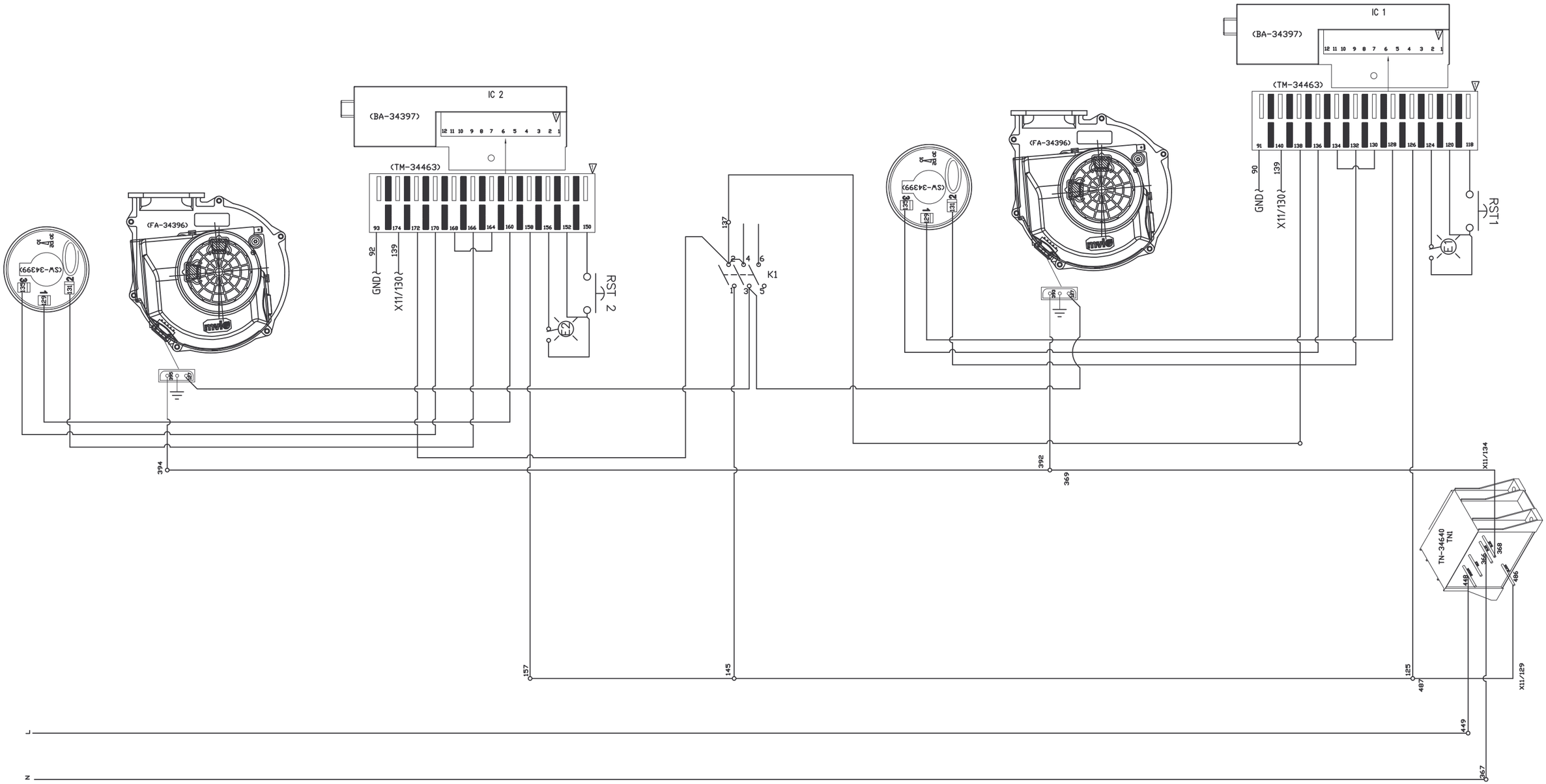

		REFER TO PAGE 1		
REV	ECO	DESCRIPTION	DATE	APP

ALTO-SHAAM		WIRING DIAGRAM	
		20.20 ESQ 120V 1PH TOUCH	
BY:	MVQ	DWG: 77335	SHEET
DATE:	1/4/10		5_OF_5

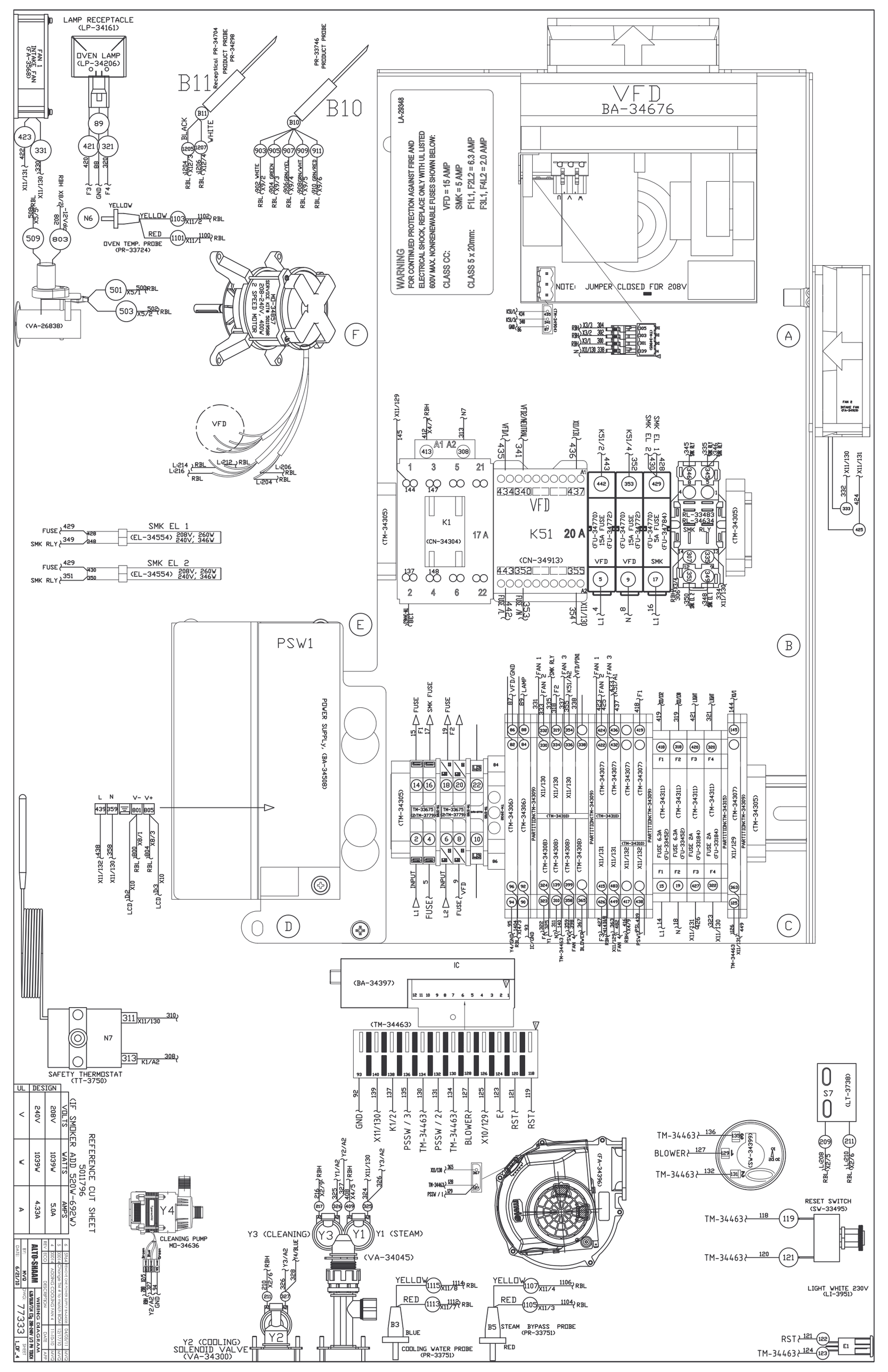

UL	DESIGN	
V	240V	208V
W	1039W	1039W
A	4.33A	5.0A

VOLTS
WATTS
AMPS

(IF SMOKER ADD 520W-692W)

REFERENCE CUT SHEET
5011796

REV	ECO	DESCRIPTION	DATE	APP
5	35124	Revised overheat alarm function	04/07/21	DVO
4	35091	Change TM-8 to master BOM	12/17/20	DVO
3	35041	ADDING COOKING FAN 4	11/13/20	DVO
2	ECO			
1				

ALTO-SHAAM
MILWAUKEE, WI
DRAWN BY: DVO
DATE: 6/22/20
WIRING DIAGRAM
MARATHON 10g, 20g, 20e, 20 H, 10DD
DWG NO. 77333
LDF.4

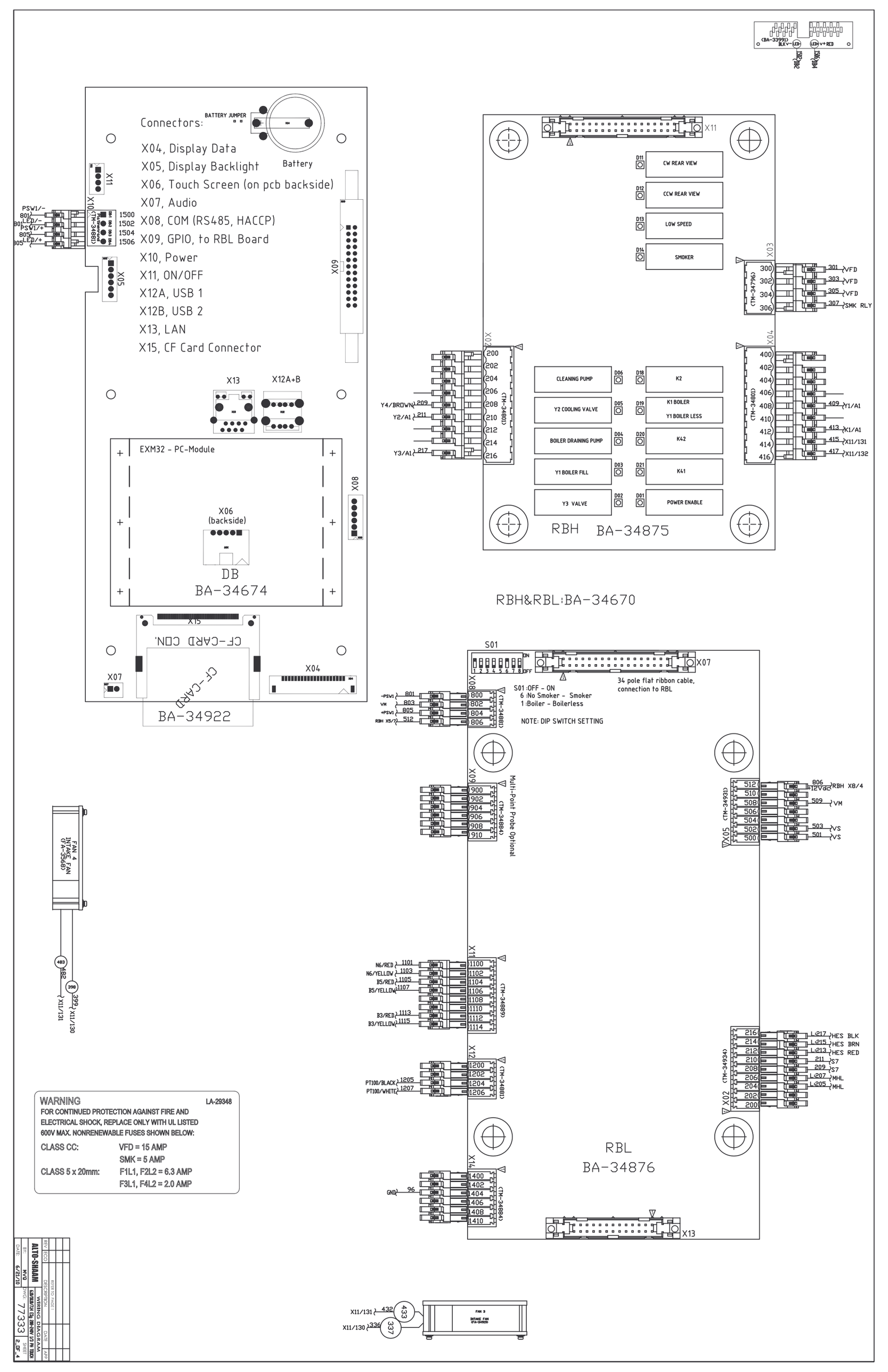
Connectors:
X04, Display Data
X05, Display Backlight
X06, Touch Screen (on pcb backside)
X07, Audio
X08, COM (RS485, HACCP)
X09, GPIO, to RBL Board
X10, Power
X11, ON/OFF
X12A, USB 1
X12B, USB 2
X13, LAN
X15, CF Card Connector
BATTERY JUMPER
Battery
EXM32 - PC-Module
DB
BA-34674
CF-CARD CON.
BA-34922
CW REAR VIEW
CCW REAR VIEW
LOW SPEED
SMOKER
CLEANING PUMP
Y2 COOLING VALVE
BOILER DRAINING PUMP
Y1 BOILER FILL
Y3 VALVE
K2
K1 BOILER
Y1 BOILER LESS
K42
K41
POWER ENABLE
RBH BA-34875
RBH&RBL:BA-34670
S01 :OFF - ON
6 :No Smoker - Smoker
1 :Boiler - Boilerless
NOTE: DIP SWITCH SETTING
34 pole flat ribbon cable, connection to RBL
Multi-Point Probe Optional
FAN 4 INTAKE FAN (FA-35681)
RBL
BA-34876
WARNING
LA-29348
FOR CONTINUED PROTECTION AGAINST FIRE AND ELECTRICAL SHOCK, REPLACE ONLY WITH UL LISTED 600V MAX. NONRENEWABLE FUSES SHOWN BELOW:
CLASS CC: VFD = 15 AMP
SMK = 5 AMP
CLASS 5 x 20mm: F1L1, F2L2 = 6.3 AMP
F3L1, F4L2 = 2.0 AMP
AUTO-SHAWM
WIRING DIAGRAM
77333
2 OF 4

L1
L2
L3
4
24
11
3
51
FU-34784
FU-34770
2: FU-34772
SMK FET
VFD / FUSE
SMK FUSE
429
442
CN-34913
2 4 6
K51
1 3 5
GREEN
86
87
LINE
434 435
NEUTRAL
340 341
BA-34676
VFD
339
301
303
305
MO-34857
MTR
SK1/2 430
350 SK1/1
2: EL-34554
SMOKER
ELEMENTS
SMOKER OPTION
SK2/2 428
348 SK2/1
X10
DB1 DB2 DB3 DB4
PSN
PSL
25
318
319
F2
6.3A
2: FUSE HOLDER FU-34311
2: FU-33452
5
418
419
F1
6.3A
417
359
PSW1
BA-34508
12VDC
360
805
ALTO-SHAAM LED
BA-33991
SMOKER OPTION
RL-34633
RL-34634
345
346
RBH X3/4
305
307
309
334
X11/131
Connectors:
X04, Display Data
X05, Display Backlight
X06, Touch Screen (on pcb backside)
X07, Audio
X08, COM (RS485, HACCP)
X09, GPIO, To RBL Board
X10, Power
X11, ON/OFF
X12A, USB 1
X12B, USB 2
X13, LAN
X15, CF Card Connector
Battery
60X
80X
X12A-B
X13
X06
(backside)
EXM32 - PC-Module
DB
BA-34674
X04
X15
CF-CARD
CF_CARD CON.
X07
X11
X10
X05
1106 RBL
1104 RBL
YELLOW
RED
X11/4
X11/3
B5 STEAM PROBE
(PR-33751)
1102 RBL
1100 RBL
X11/2
X11/1
N6
DVEN TEMP. PROBE
(PR-33724)
1114 RBL
1112 RBL
X11/8
X11/7
B3
COOLING WATER PROBE
(PR-33751)
B11
Reception PRODUCT PROBE
PR-34298
PR-34299
WHITE
BLACK
RBL X12/5
1206
RBL X12/4
1204
(207)
(208)
VM: VENT MOTOR
VS: VENT SWITCH
FU: FUSE CONTROL VFD
FUSE SMK: FUSE CONTROL SMOKER
VFD: VARIABLE FREQUENCY DRIVE
DB3& DB4: DISPLAY BOARD + DC INPUT
DB1& DB2: DISPLAY BOARD - DC INPUT
437
RBH
BA-34875
(TM-34801)
416 414 412 410 408 406 404 402 400
X04
(TM-34796)
306 304 302 300
X03
(TM-34801)
200 202 204 206 208 210 212 214 216
X02
426 415
427
420
F3
6.3A
313 308
K1
A1 Y1
A2
88 89
CAVITY LAMP
320
F4
6.3A
311
N7
SAFETY THERMOSTAT
310
324
322
323
K51
436
353
SMK RLY
335
307
A1
A2
352
334
MO-34636
CLEAN PUMP
328
Y4
A1 Y2
Y3 VA-34045
A2
327
A1 Y3
Y4 VA-34300
A2
X11/130: BANK OF 3 BLUE SPRING TERMINALS
B1: BLUE UPPER WATER LEVEL STEAM TANK
B2: RED LOWER WATER LEVEL STEAM TANK
B3: BLUE PROBE CONDENSATION TANK
B5: RED PROBE CONDENSATION TANK
PSW: 12VdC POWER SUPPLY
S7: DOOR SWITCH HIGH LIMIT
K41 & K42: CONTROL CONVECTION
DP1: BUILDER DRAIN PUMP
E1, E2, E3: HCD ELEMENT
E4: CONVECTION ELEMENT
SMK RLY: SMOKER RELAY
SMK EL: SMOKER ELEMENT
K51 & K52: MOTOR DRIVE CONTACTOR
X02
(TM-34934)
L1 200
L2 202
L4 204
L6 206
L8 208
L10 210
L12 212
L14 214
L16 216
DOOR SAFETY SWITCH
HL RED
HL BROWN
HL BLACK
X05
(TM-34931)
500 502 504 506 508 510 512
VENT MOTOR SW
12DC MOTOR
M
X08
(TM-34881)
800 802 804 806
Multi-Point Probe Optional
X09
(TM-34884)
900 902 904 906 908 910
X11
(TM-34889)
1100 1102 1104 1106 1108 1110 1112 1114
M6/RED 1101
M6/YELLOW 1103
B5/RED 1105
B5/YELLOW 1107
X12
(TM-34881)
1200 1202 1204 1206
B3/RED 1113
B3/YELLOW 1115
PT100/BLACK 1205
PT100/WHITE 1207
X14
(TM-34884)
1400 1402 1404 1406 1408 1410
96
S01
ON
OFF
1 2 3 4 5 6 7 8
S01:OFF - ON
6 :No Smoker - Smoker
1 :Boiler - Boilerless
NOTE: DIP SWITCH SETTING
(IF SMOKER ADD 520W-692W)

	VOLTS	WATTS	AMPS
DESIGN	208V	1039W	5.0A
	240V	1039W	4.33A
UL	V	W	A

REFER TO PAGE 1
REV | ECO | DESCRIPTION | DATE | APP
ALTO-SHAAM
WIRING DIAGRAM
6/MH10/7H ESg 208-240V 1/3 PH TOUCH
BY: MVQ
DATE: 6/21/10
DWG: 77333
SHEET 3_OF_4

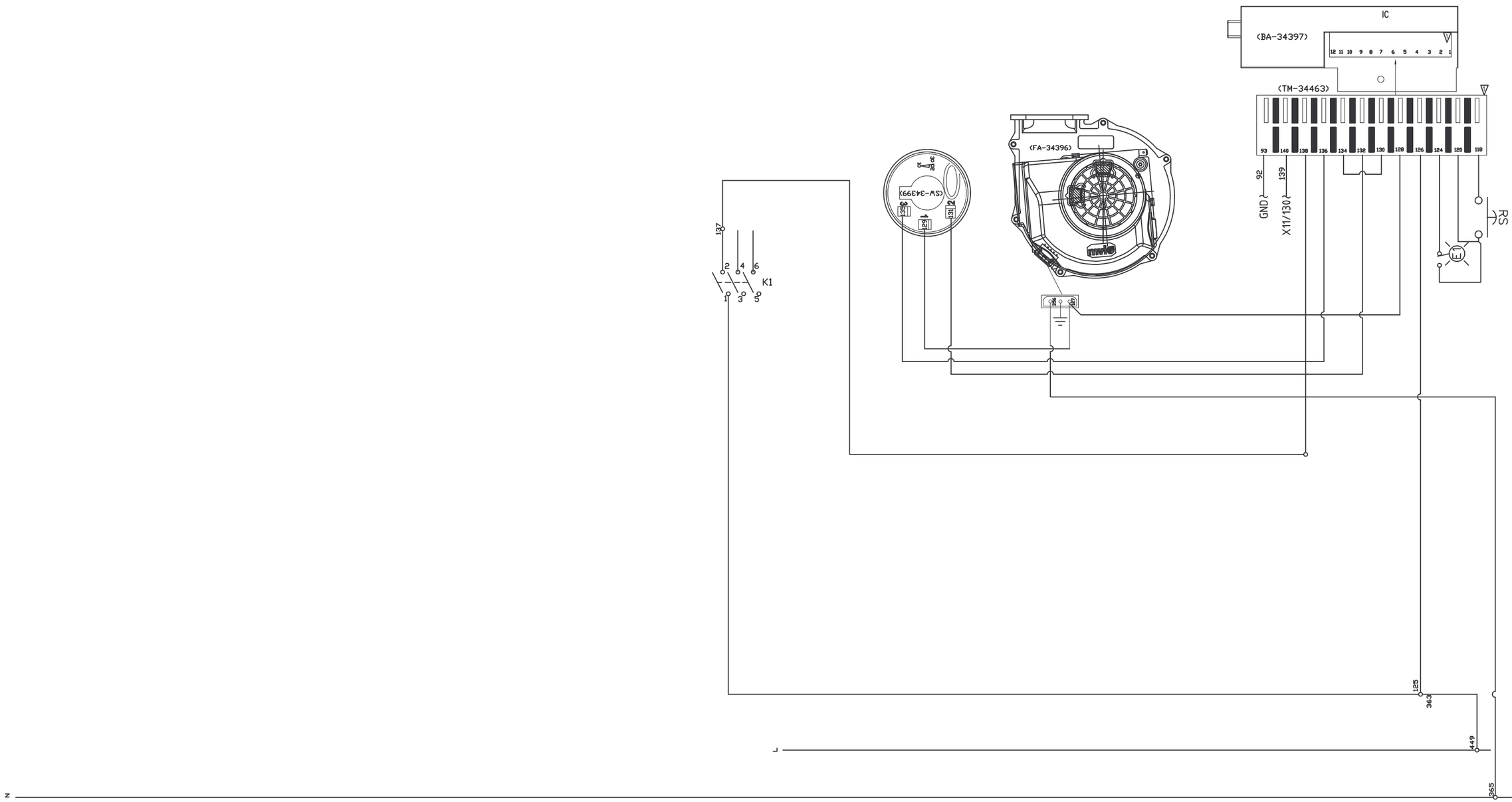

		REFER TO PAGE 1		
REV	ECO	DESCRIPTION	DATE	APP

ALTO-SHAAM	WIRING DIAGRAM		
	6.IH/HH/7.IH ES$_6$ 208-240V 1/3 PH TOUCH		
BY: HVQ	DWG: 77333	SHEET	
DATE: 6/21/10		4_OF_4	

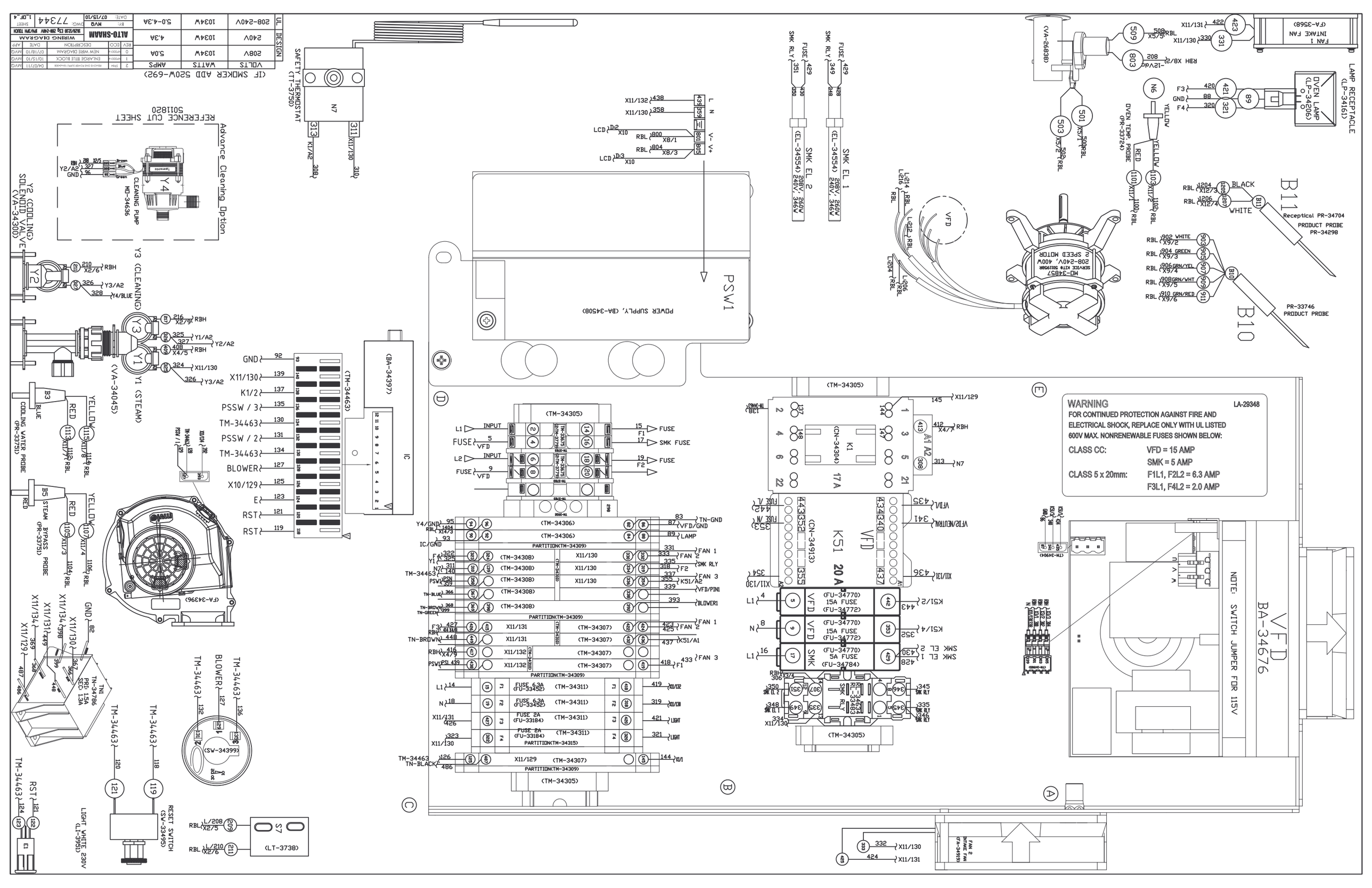
WARNING
LA-29348
FOR CONTINUED PROTECTION AGAINST FIRE AND ELECTRICAL SHOCK, REPLACE ONLY WITH UL LISTED 600V MAX. NONRENEWABLE FUSES SHOWN BELOW:
CLASS CC: VFD = 15 AMP SMK = 5 AMP
CLASS 5 x 20mm: F1L1, F2L2 = 6.3 AMP F3L1, F4L2 = 2.0 AMP
VFD BA-34676
NOTE: SWITCH JUMPER FOR 115V
PSW1 POWER SUPPLY, (BA-34508)
(TM-34305)
(TM-34306)
(TM-34308)
(TM-34307)
(TM-34311)
(TM-34315)
(TM-34463)
(BA-34397)
(VA-34045)
(FA-34396)
(SW-34399)
(LT-3738)
(CN-34304)
(CN-34913)
K51 20 A
VFD
SMK
(FU-34770) 15A FUSE (FU-34772)
(FU-34770) 5A FUSE (FU-34784)
(FU-33452) 6.3A
(FU-33184) 2A
(FU-33184) 8A
(FU-34786) PRI 15A SEC 13A
(FA-35681)
(FA-35682)
(FA-35683)
(FA-35684)
(FA-35685)
(FA-35686)
(FA-35687)
(FA-35688)
(FA-35689)
(FA-35690)
(FA-35691)
(FA-35692)
(FA-35693)
(FA-35694)
(FA-35695)
(FA-35696)
(FA-35697)
(FA-35698)
(FA-35699)
(FA-35700)
(FA-35701)
(FA-35702)
(FA-35703)
(FA-35704)
(FA-35705)
(FA-35706)
(FA-35707)
(FA-35708)
(FA-35709)
(FA-35710)
(FA-35711)
(FA-35712)
(FA-35713)
(FA-35714)
(FA-35715)
(FA-35716)
(FA-35717)
(FA-35718)
(FA-35719)
(FA-35720)

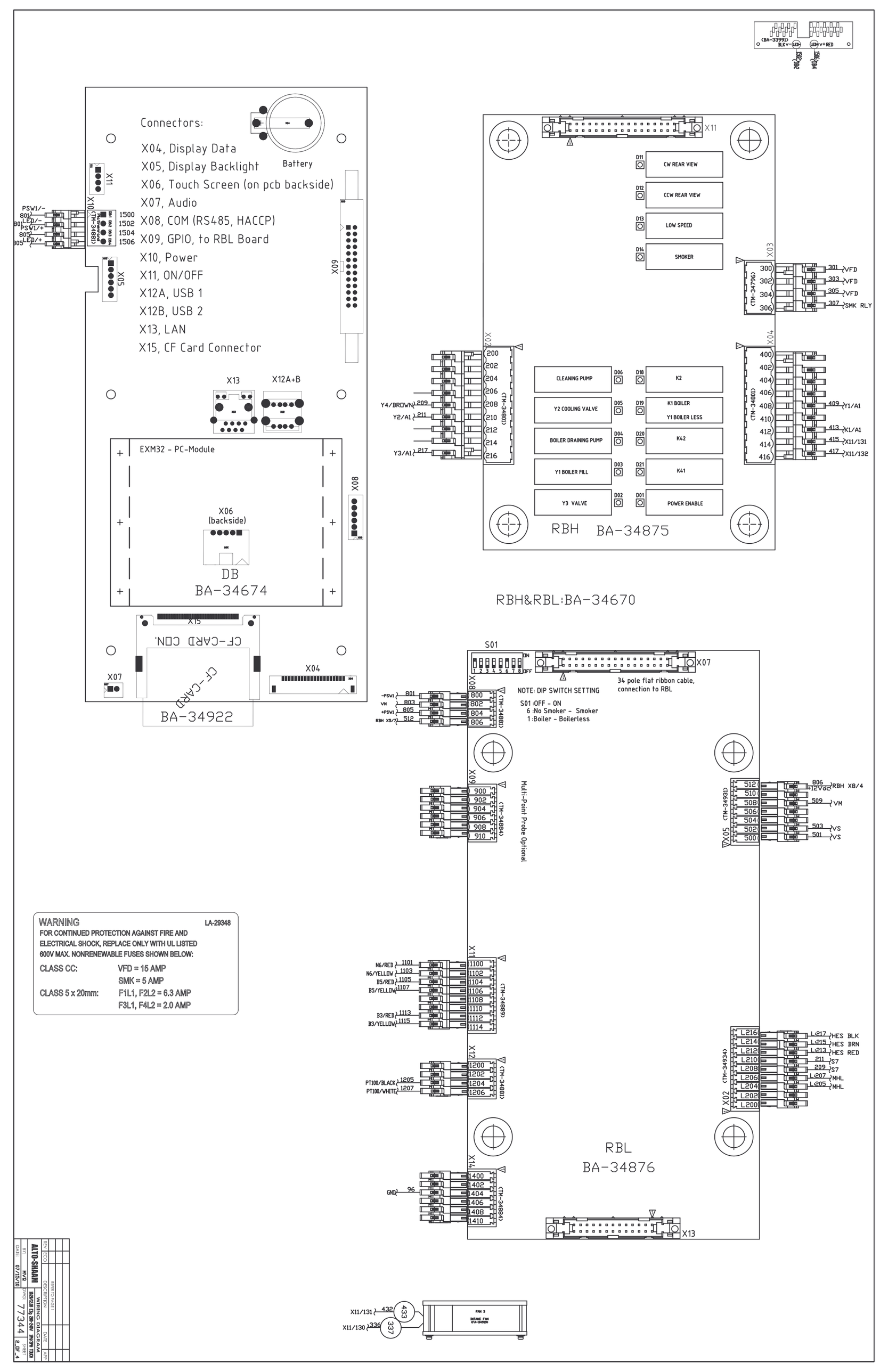
Connectors:
X04, Display Data
X05, Display Backlight
X06, Touch Screen (on pcb backside)
X07, Audio
X08, COM (RS485, HACCP)
X09, GPIO, to RBL Board
X10, Power
X11, ON/OFF
X12A, USB 1
X12B, USB 2
X13, LAN
X15, CF Card Connector
Battery
EXM32 - PC-Module
DB
BA-34674
BA-34922
RBH
BA-34875
RBH&RBL:BA-34670
RBL
BA-34876
CW REAR VIEW
CCW REAR VIEW
LOW SPEED
SMOKER
CLEANING PUMP
Y2 COOLING VALVE
BOILER DRAINING PUMP
Y1 BOILER FILL
Y3 VALVE
K2
K1 BOILER
Y1 BOILER LESS
K42
K41
POWER ENABLE
NOTE: DIP SWITCH SETTING
S01 :OFF - ON
6 :No Smoker - Smoker
1 :Boiler - Boilerless
34 pole flat ribbon cable, connection to RBL
Multi-Point Probe Optional
WARNING
LA-28348
FOR CONTINUED PROTECTION AGAINST FIRE AND ELECTRICAL SHOCK, REPLACE ONLY WITH UL LISTED 600V MAX. NONRENEWABLE FUSES SHOWN BELOW:
CLASS CC: VFD = 15 AMP
SMK = 5 AMP
CLASS 5 x 20mm: F1L1, F2L2 = 6.3 AMP
F3L1, F4L2 = 2.0 AMP
ALTO-SHAAM
WIRING DIAGRAM
77344
2_OF_4

X11/130: BANK OF 3 BLUE SPRING TERMINALS
B1: BLUE UPPER WATER LEVEL STEAM TANK
B2: RED LOWER WATER LEVEL STEAM TANK
B3: BLUE PROBE CONDENSATION TANK
B5: RED PROBE CONDENSATION TANK
PSW: 12Vdc POWER SUPPLY
S7: DOOR SWITCH
N7: SAFETY HIGH LIMIT
K41 & K42: CONTROL CONVECTION
DP1: BOILDER DRAIN PUMP
E1, E2, E3: H2O ELEMENT
E4: CONVECTION ELEMENT
SMK: RLY: SMOKER RELAY
SMK EL: SMOKER ELEMENT
K51 & K52: MOTOR DRIVE CONTACTOR
VM: VENT MOTOR
VS: VENT SWITCH
FUSE VFD: FUSE CONTROL VFD
FUSE SMK: FUSE CONTROL SMOKER
VFD: VARIABLE FREQUENCY DRIVE
DB3& DB4: DISPLAY BOARD + DC INPUT
DB1& DB2: DISPLAY BOARD - DC INPUT

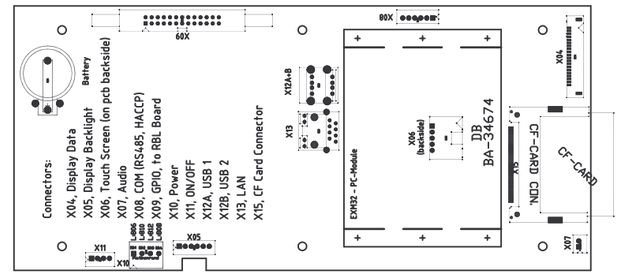

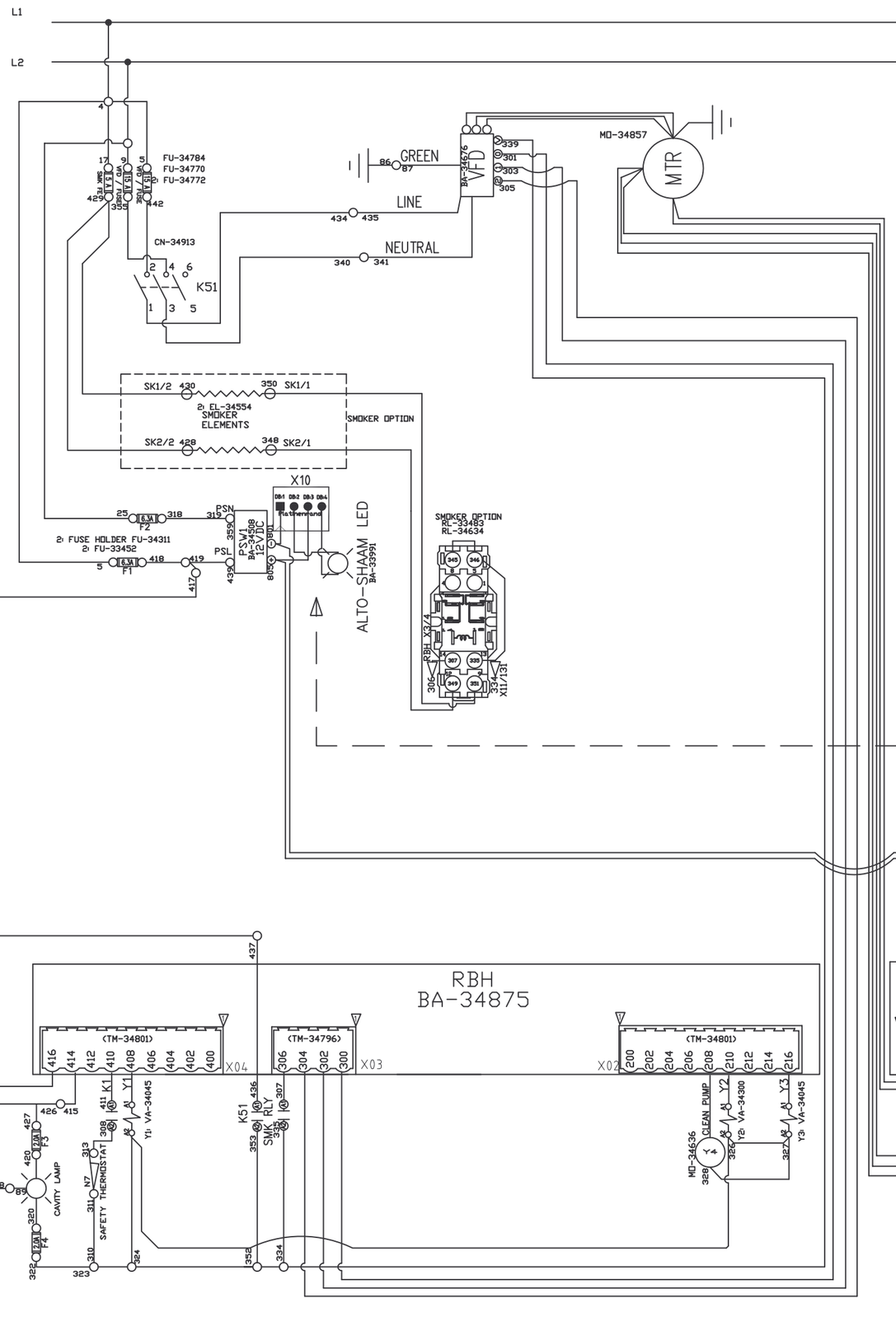

		VOLTS	WATTS	AMPS
UL DESIGN		208V	1034W	5.0A
		240V	1034W	4.3A
		208-240V	1034W	5.0-4.3A

REV	ECO	DESCRIPTION	DATE	APP
		REFER TO PAGE 1		

ALTO-SHAAM — WIRING DIAGRAM
1828/1218 ES₂ 208-240V 1PH/3PH TOUCH

BY:	MVQ	DWG:	77344	SHEET
DATE:	07/15/10			3_OF_4

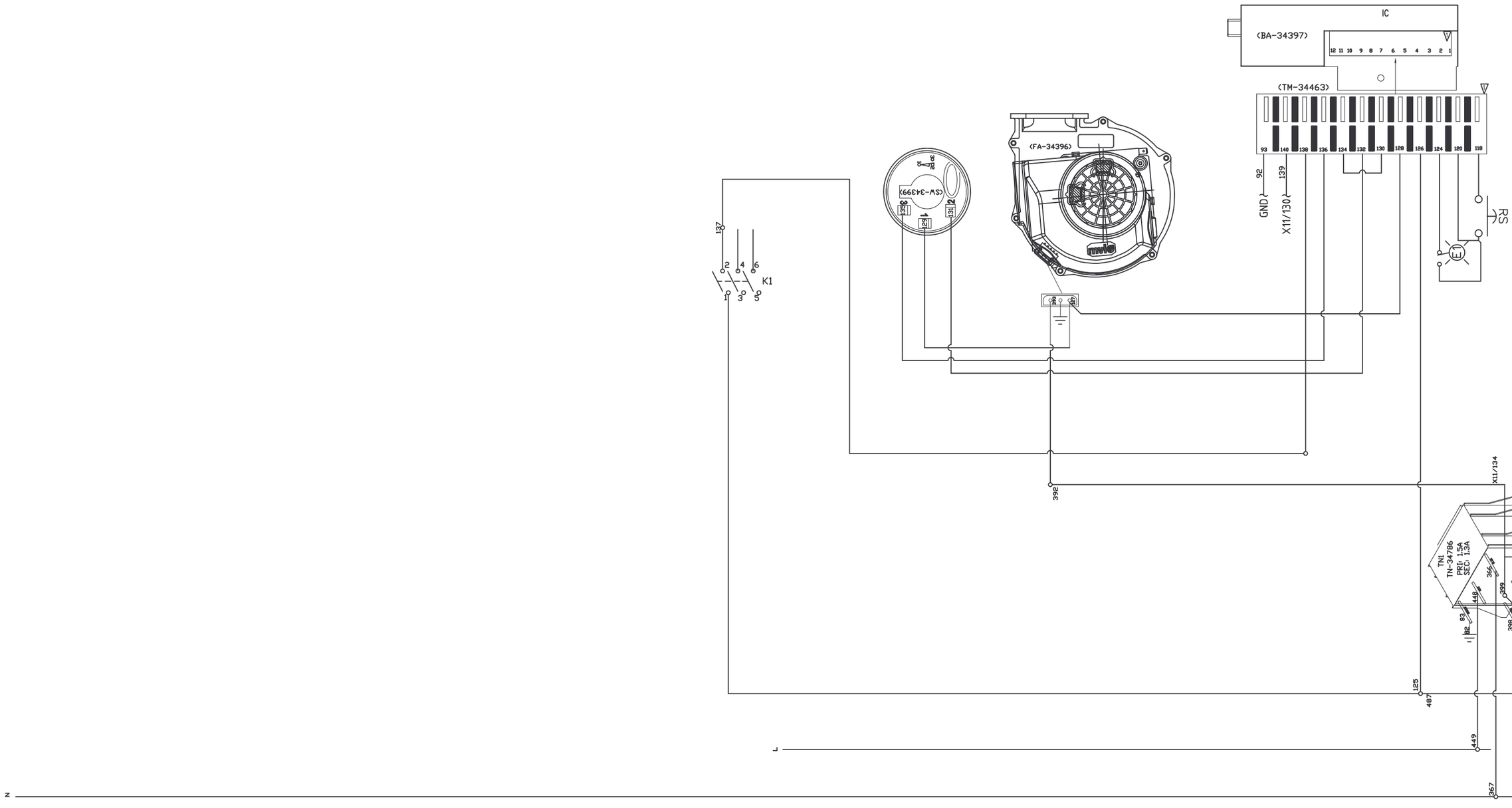

	-			
		REFER TO PAGE 1		
REV.	ECO	DESCRIPTION	DATE	APP

ALTO-SHAAM	WIRING DIAGRAM	
	HLBI/1218 ESq 208-240V 1PH/3PH TOUCH	
BY: MVQ	DWG: 77344	SHEET 4_OF_4
DATE: 07/15/10		

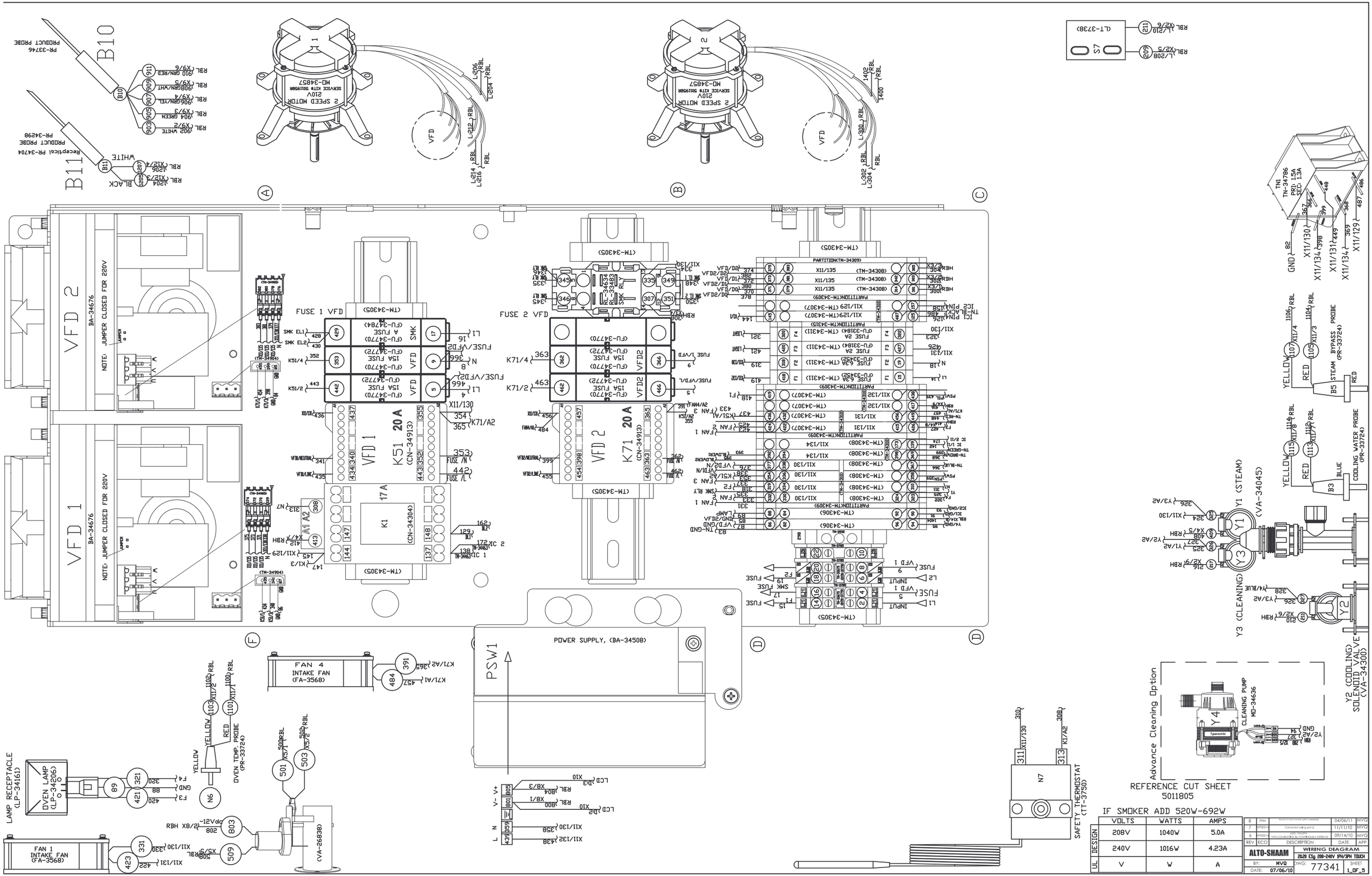

REFERENCE CUT SHEET
5011805

IF SMOKER ADD 520W-692W

	VOLTS	WATTS	AMPS
DESIGN	208V	1040W	5.0A
	240V	1016W	4.23A
UL	V	W	A

REV	ECO	DESCRIPTION	DATE	APP
8	5964	REMOVE ONE POWER SUPPLY BRACKET	04/06/11	MVQ
7	KF00014	Corrected rating per UL	11/11/10	MVQ
6	KF00014	ADD 1PH/3PH TWO COMBUSTION BLOCK CONTINUOUS OPERATE	09/14/10	MVQ

ALTO-SHAAM

WIRING DIAGRAM
20.20 ESg 208-240V 1PH/3PH TOUCH

BY: MVQ
DATE: 07/06/10
DWG: 77341
SHEET 1_OF_5

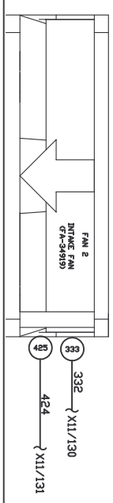
FAN 2
INTAKE FAN
(FA-34659)
425
333
332
X11/130
424
X11/131

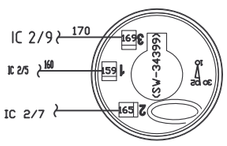
IC 2/9
170
IC 2/5
160
IC 2/7
165
(SW-34395)

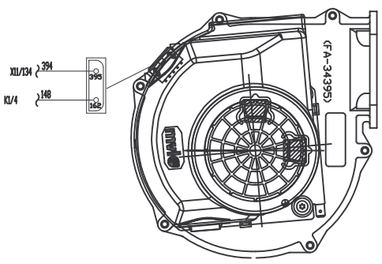
X11/134
394
390
K1/4
148
142
(FA-34595)

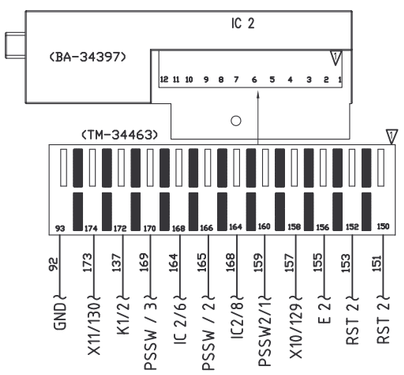
IC 2
(BA-34397)
12 11 10 9 8 7 6 5 4 3 2 1
(TM-34463)
93 174 172 170 168 166 164 160 158 156 152 150
92 GND
173 X11/130
137 K1/2
169 PSSW / 3
164 IC 2/6
165 PSSW / 2
168 IC2/8
159 PSSW2/1
157 X10/129
155 E 2
153 RST 2
151 RST 2

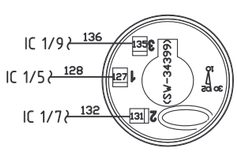
IC 1/9
136
IC 1/5
128
IC 1/7
132
(SW-34395)

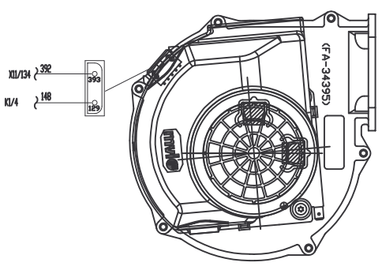
X11/134
392
390
K1/4
148
142
(FA-34595)

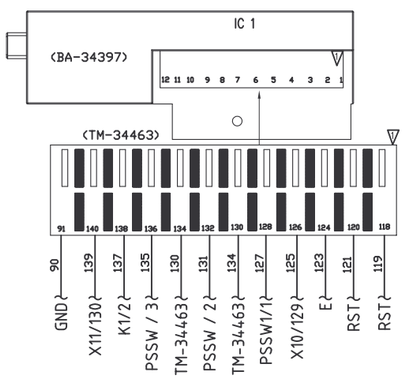
IC 1
(BA-34397)
12 11 10 9 8 7 6 5 4 3 2 1
(TM-34463)
91 140 138 136 134 132 130 128 126 124 120 118
90 GND
139 X11/130
137 K1/2
135 PSSW / 3
130 TM-34463
131 PSSW / 2
134 TM-34463
127 PSSW1/1
125 X10/129
123 E
121 RST
119 RST

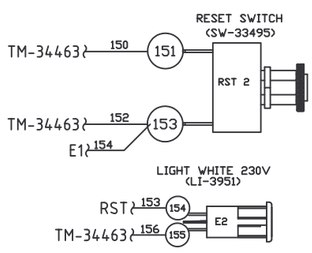
RESET SWITCH
(SW-33495)
TM-34463
150
151
RST 2
TM-34463
152
153
E1
154
LIGHT WHITE 230V
(LI-3951)
RST
153
154
E2
TM-34463
156
155

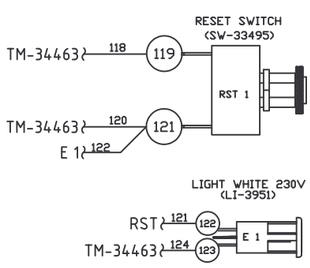
RESET SWITCH
(SW-33495)
TM-34463
118
119
RST 1
TM-34463
120
121
E 1
122
LIGHT WHITE 230V
(LI-3951)
RST
121
122
E 1
TM-34463
124
123

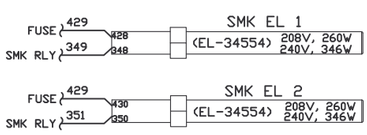
FUSE
429
SMK RLY
349
428
848
SMK EL 1
(EL-34554)
208V, 260V
240V, 346V
FUSE
429
SMK RLY
351
430
850
SMK EL 2
(EL-34554)
208V, 260V
240V, 346V

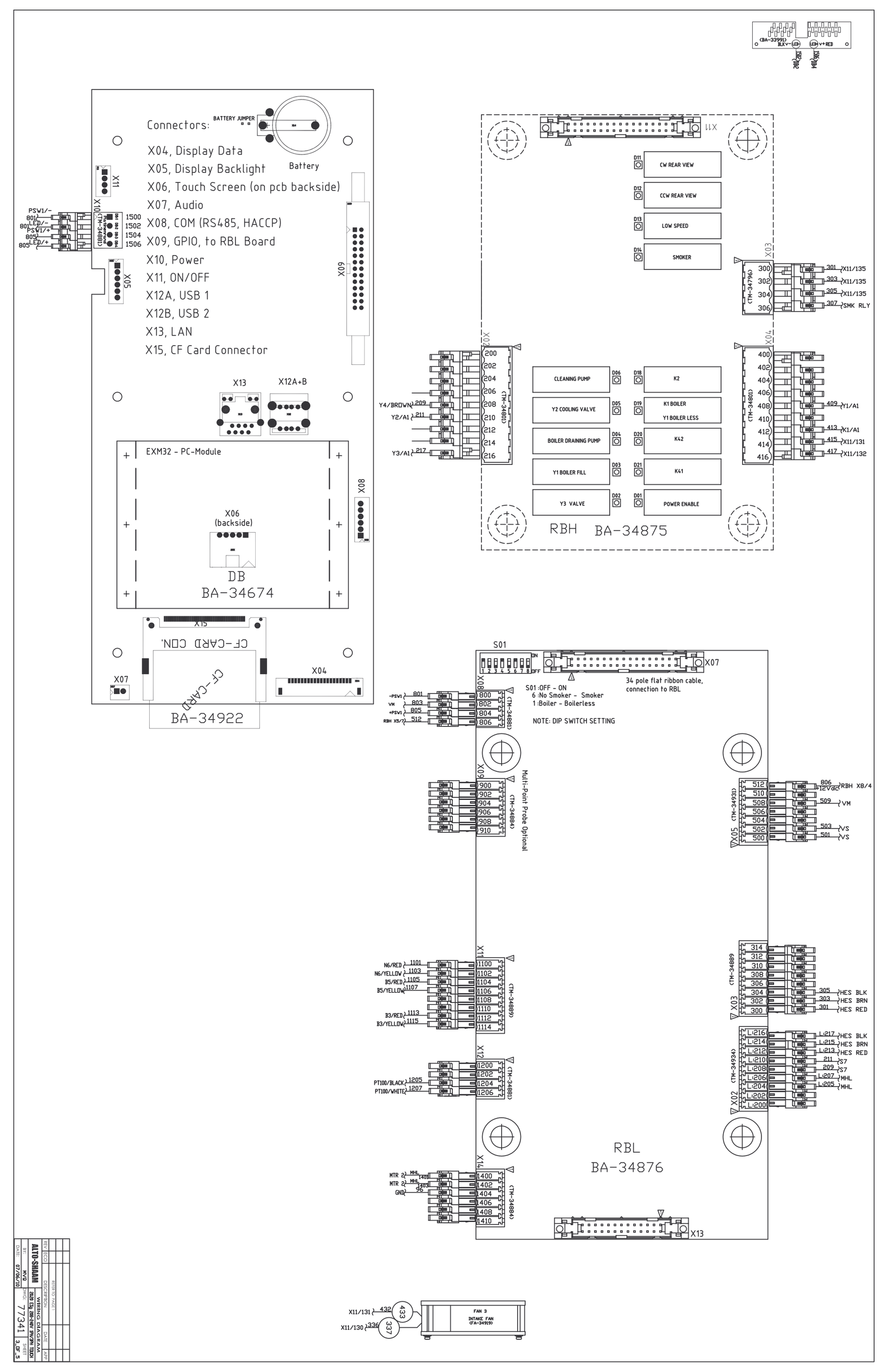

DRN	KVG	REV	ECO	DESCRIPTION	DATE
DATE	07/06/10			REFER TO PAGE#	
SHT	77341			WIRING DIAGRAM	
3 OF 5				208 to 240V PROPLUS	

ALTO-SHAAM

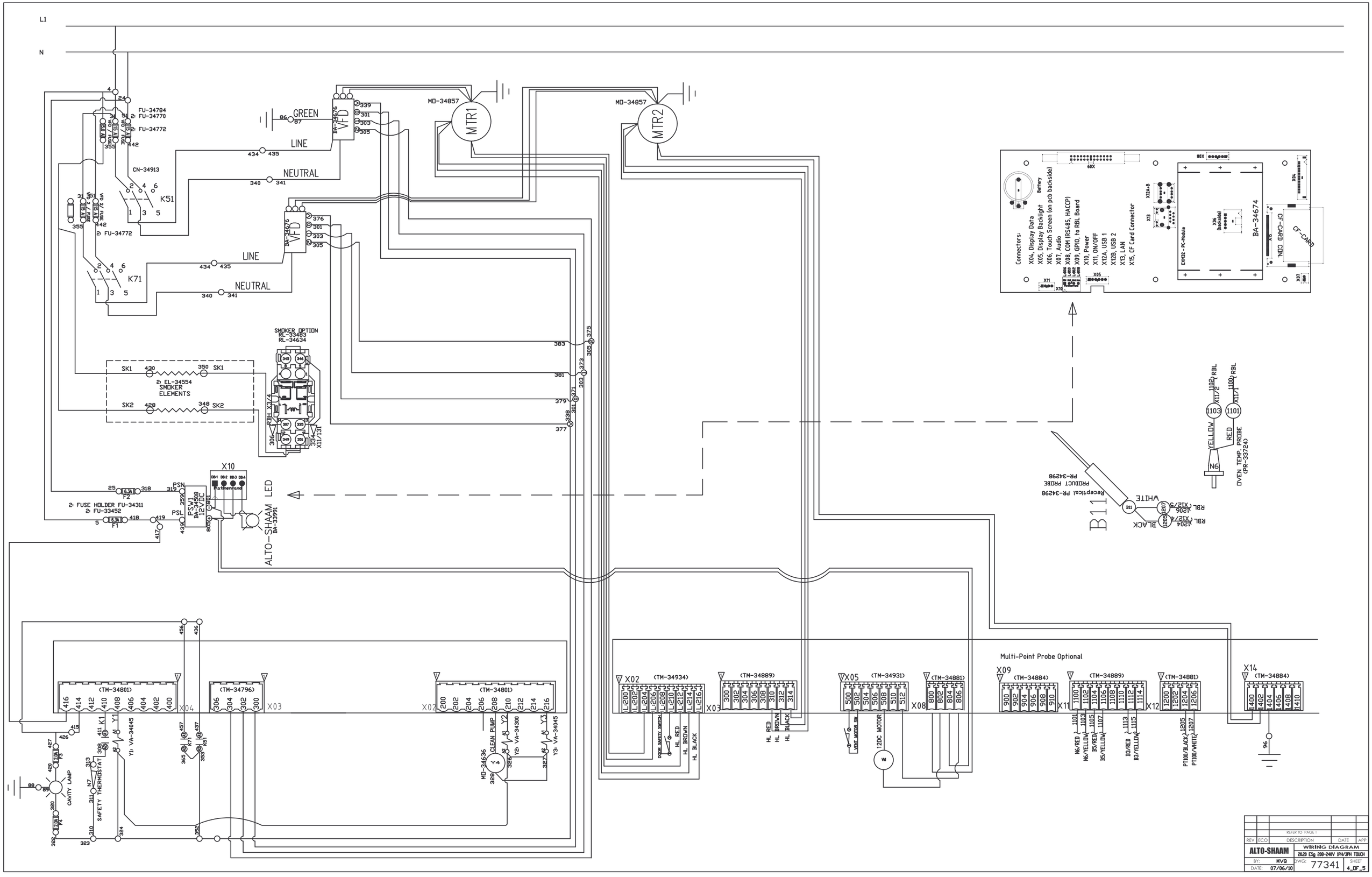

L1
N
FU-34784
2: FU-34770
2: FU-34772
CN-34913
K51
K71
GREEN
LINE
NEUTRAL
VFD
BA-34676
MO-34857
MTR1
MTR2
SMOKER OPTION
RL-33483
RL-34634
SK1
SK2
2: EL-34554
SMOKER
ELEMENTS
X10
2: FUSE HOLDER FU-34311
2: FU-33452
PSW1
BA-34508
12VDC
ALTO-SHAAM LED
BA-33991
Connectors:
X04, Display Data
X05, Display Backlight
X06, Touch Screen (on pcb backside)
X07, Audio
X08, COM (RS485, HACCP)
X09, GPIO, to RBL Board
X10, Power
X11, ON/OFF
X12A, USB 1
X12B, USB 2
X13, LAN
X15, CF Card Connector
Battery
EXM32 - PC-Module
BA-34674
CF-CARD CON.
CF-CARD
Receptical PR-34298
PRODUCT PROBE
PR-34298
B11
WHITE
BLACK
YELLOW
RED
N6
OVEN TEMP. PROBE
(PR-33724)
Multi-Point Probe Optional
(TM-34801)
(TM-34796)
(TM-34934)
(TM-34889)
(TM-34931)
(TM-34881)
(TM-34884)
X02
X03
X04
X05
X08
X09
X11
X12
X14
CAVITY LAMP
SAFETY THERMOSTAT
Y1: VA-34045
Y2: VA-34300
Y3: VA-34045
MO-34636
CLEAN PUMP
DOOR SAFETY SWITCH
HL RED
HL BROWN
HL BLACK
VENT MOTOR SW
12DC MOTOR
N6/RED
N6/YELLOW
B5/RED
B5/YELLOW
B3/RED
B3/YELLOW
PT100/BLACK
PT100/WHITE
REFER TO PAGE 1
REV
ECO
DESCRIPTION
DATE
APP
ALTO-SHAAM
WIRING DIAGRAM
2020 ESg 208-240V 1PH/3PH TOUCH
BY: MVQ
DATE: 07/06/10
DWG: 77341
SHEET 4_OF_5

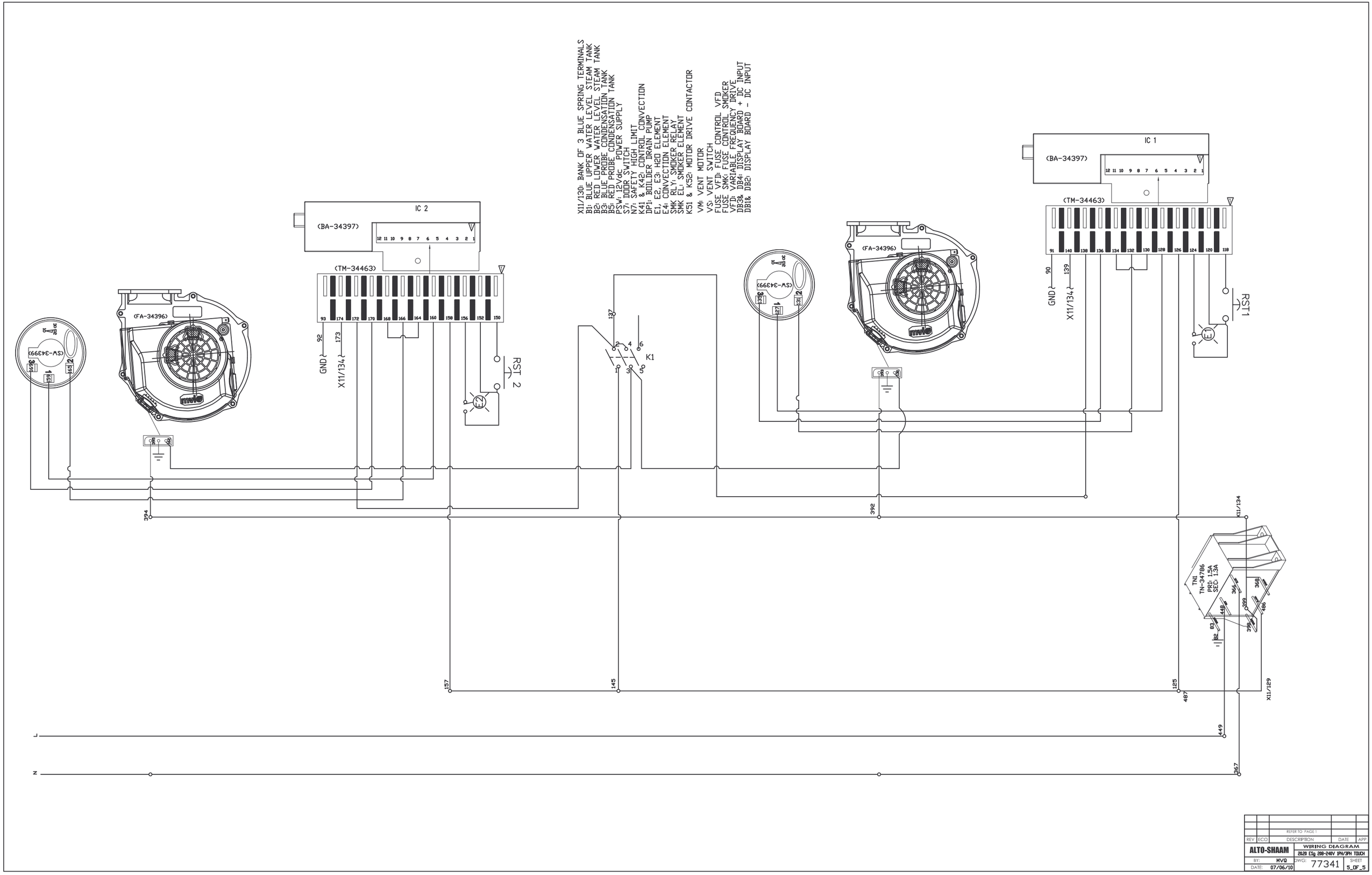

REV	ECO	DESCRIPTION	DATE	APP
		REFER TO PAGE 1		

ALTO-SHAAM

WIRING DIAGRAM

2020 ESg 208-240V 1PH/3PH TOUCH

BY: MVQ

DATE: 07/06/10

DWG: 77341

SHEET 5_OF_5